1157

Action of Phosphates in Sausage Products

II. Pilot Plant Studies of the Effects of Some Phosphates on Binding and Color

SECOND of a series, the present article is concerned with the action of phosphates in sausage products, such as frankfurters and bologna sausage. The first paper dealt with the results of a laboratory study of factors influencing the moisture retention of lean ground meat containing added phosphates *(2)*. The present paper reports the results of an investigation of the effects of incorporating phosphates in commercial-type frankfurters and bologna sausage.

The marked interest recently displayed by the sausage industry in employing phosphate additives stems from recognition of the possibility that production methods or quality, or both, may be improved. Primarily, there is interest in improving the "binding" of meats to improve certain of the physical characteristics of sausage products and to permit wider latitude in utilizing both meats and processes. One object is to improve the utilization of raw materials naturally lacking in ability to bind. Another is to reduce tendencies towards separation and breakdown of products, a consideration of special importance in operating smokehouses at the relatively high temperatures necessary in rapid smoking and curing. The elimination of some of the risk involved in rapid smoking and cooking can, in effect, increase the capacity of smokehouse facilities. In addition, there is considerable interest in improving color.

The ability of phosphates to produce the effects mentioned has previously been both supported and denied, as was indicated in the review of literature included in the first paper of this series *(2)*. Recognition of the limited usefulness of information available on this subject led to the investigation here described. The investigation included a study of some effects on the binding and color of sausage produced by the usual curing agents, and by adding a limited number of phosphates. Emphasis was also given to determining the influence of processing conditions.

EXPERIMENTAL AND RESULTS

Sausage-making: Generally, in each experiment a series of from 3 to 5 batches of sausage was prepared. The batches of each series were cured with different chemical agents or combinations of them, but otherwise, they were formulated from the same freshly prepared lots of meat. The different kinds of meat employed were prepared as follows:

Steer beef was separated from carcasses stored at 37° F. (2.8° C.) for 3–7 days after slaughter. The meat was wrapped in cellophane and placed in boxes holding 25 or 50 pounds. These were stored at 0° F. (−17.8° C.). Frozen lean beef was allowed to thaw and was ground, first through a one-inch plate and then through a ⅛th-inch plate.

The pork used in preparing Series 3 to 5 was obtained by boning-out entire hog carcasses. It was separated into distinctly lean and all-fat portions which were ground through ⅜ths- and one-inch plates, respectively. Lean pork trimmings, which had been ground through a one-inch plate, were used in preparing Series 6 to 12.

Each lot of ground meat was thoroughly mixed and divided into the portions required in formulating the batches comprising a series. Data relative to the meat and ice used in the preparation of each of the 12 series are given in Table 1.

TABLE 1

Weights of meat and ice used in preparing batches of sausages in Series 1 to 12

Series	Weight of meat per batch		Weight of ice per batch
	Beef	Pork[1]	
	lb.	*lb.*	*lb.*
1 and 2	20	....	5
3	24	10L, 15F	15
4 and 5	25	10L, 15F	15
6, 7, 8, 9, and 10	25	25T	16
11	12.5	12.5T	7
12	25	25T	16

[1] Letters L, F, and T designate pork lean, fat, and trimmings (regular), respectively.

All sausages, except those in Series 1 and 2 which contained only single curing agents, were cured with a mixture of sodium chloride, sodium nitrite, sodium nitrate, and sugar in the proportion of 2 pounds (908 g.) of sodium chloride, 2 ounces (56.8 g.) of analytical grade sodium nitrate, ¼th ounce (7.1 g.) of C. P. sodium nitrite, and 4 ounces (113.6 g.) of cane sugar per 100 pounds of meat. A commercially prepared spice mixture, containing dextrose, cardamon, and white, black and red pepper, was used in the proportion of 6½ ounces (184.4 g.) per 100 pounds of meat in the preparation of batches in Series 3 to 12. Food grade phosphates in powdered form were used in the proportion of 8 ounces (226.9 g.) per 100 pounds of meat. Those added were sodium hexametaphosphate (SHP), a commercial preparation containing pyrophosphates and an orthophosphate, and combinations containing two or more of the phosphates sodium hexametaphosphate (SHP), tetrasodium- and disodium acid pyrophosphates (TSPP and SAPP, respectively), and potassium polymetaphosphate (KPP). These phosphates are principal constituents of a number of proprietary phosphate preparations. In addition to phosphates, the commercial preparation contained at least one organic acid. All curing agents, phosphates, and spices were added in dry, finely ground form to the ground meat immediately prior to the preparation of meat emulsions in the silent cutter.

Comminuting, mixing, and stuffing were done with a grinder, silent cutter, mixer, and stuffer of small commercial size

capable of handling approximately 60-pound batches. The batches comprising a series were chopped and stuffed in succession, with only a few minutes intervening during which equipment was cleaned. Bologna was stuffed into Visking[a] cellulose, 2¾ x 22-inch "high stretch", and frankfurters into Visking[a] 27/32nd-inch NOJAX[a] casings. In preparation for smoking and cooking the batches or lots comprising each series, the individual bologna or short strings of frankfurters were distributed by a plan of randomization on smoke sticks which were placed on the same horizontal level on the sausage cage or truck. The bologna in Series 1 to 5 were smoked and cooked in a brick, steam-heated house equipped with an automatic smoker. An air-conditioned smokehouse of modern design was used in smoking and cooking Series 6 to 12. The products were cooked (finished) in the smokehouse by heating them to obtain an internal temperature of 150° F. (65.6° C.), except that those in Series 10, or those reheated in Series 8, were heated to obtain an internal temperature of 160° F. (71.1° C.).

Methods: Color values were determined by the method of Ramsbottom *(1)* with a Beckmann Model DU[a] spectrophotometer equipped with a reflectance atachment. This method involves determining the ratio of the reflectance of a sample measured at 650 mμ with that measured at 570 mμ; the ratio is the "color value". Samples were obtained for color determinations by removing a portion of the inside of the sausage with a cork borer (15 mm. diam.). The cores obtained were ground through an ordinary meat grinder equipped with a medium-sized plate, after which the ground meat was mixed and then firmly pressed into a cup (10 mm. depth, 30 mm. width) which fitted into the reflectance attachment. Samples of bologna were removed from slices cut from the approximate center of the sausages, and the color value of the freshly cut surface was determined. Each of the color values reported for the fifteen batches comprising Series 6 to 9 represents the mean of 3 values determined on different samples obtained from each batch. The color values reported for the frankfurters in the different lots of Series 11 to 12 represent the mean of values obtained on samples from 10 different frankfurters from each lot.

Determination of tensile strength—a measure of cohesiveness—and the moisture losses produced during smoking and cooking operations, were used as indices of binding. This was consistent with the generally accepted conception of binding as involving the cohesion of components and indirectly, if not directly, the retention of moisture. The tensile strength of samples of bologna was determined with an apparatus constructed mainly of wood having the appearance and the critical dimensions shown in Figure 1.[b] The method of measuring tensile strength was as follows: The center section of bologna was sliced in a U. S. Slicing Machine[a] into 0.138-inch (3.5 mm.) thick slices. Every seventh slice was selected for testing. A strip 0.875-inch (22.2 mm.) in width and approximately 4 inches (102 mm.) in length was cut from each of these slices with a scalpel. The strip was firmly clamped on the apparatus and stretched until broken by increasing pressure applied by the addition of sand to a beaker placed as shown in the illustration. The sand was added at a uniform rate through a funnel, a two-inch length of rubber tubing and a clamp being attached to the stem to permit control of flow. The weights of beaker and sand, in grams, at the breaking point of strips from five slices of a bologna representing each batch were determined. From these data, mean tensile strength values were calculated.

pH values were determined on slurries prepared by comminuting 50 g. portions of sausage with 100-ml. volumes of distilled water.

[a] The use of trade names in this paper is for identification only and does not constitute endorsement of the products.

[b] The instrument was devised to test binding by N. G. Barbella and O. G. Hankins (deceased), who were associated with this laboratory when it was part of the former Meat Office of the Animal Husbandry Division, Bureau of Animal Industry, USDA. It is illustrated here with the consent of Mr. Barbella.

To determine the shrinkage of the bologna of Series 6, 7, 8, and 9, the weights of the bologna comprising each batch were individually determined before and after smoking and cooking. The mean moisture loss, or shrinkage, of the bologna in each series, calculated and expressed as a percentage of the weight of the unheated bologna, is reported. The shrinkage of the all-beef products in Series 1 and 2 was obtained by weighing the entire batches before and after smoking and cooking.

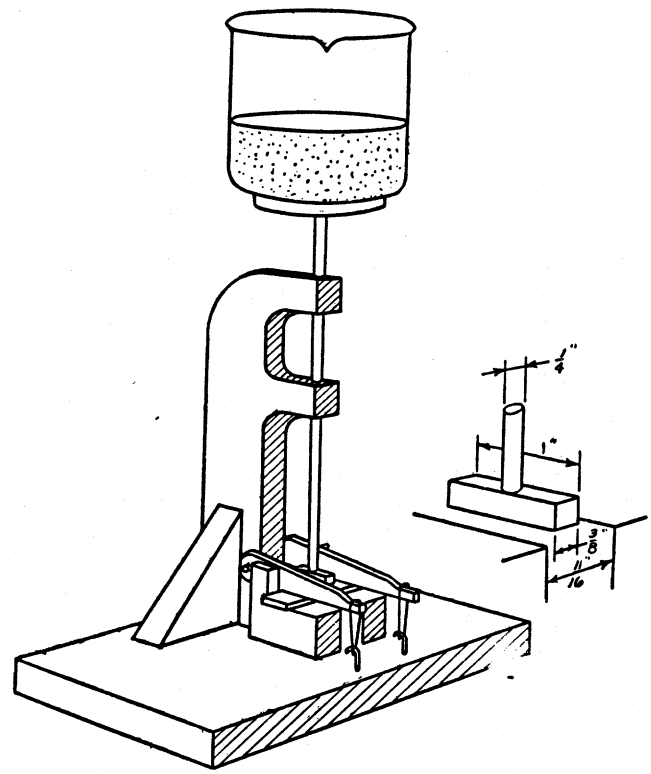

Figure 1. Apparatus employed in determining the tensile strength of strips of bologna.

Preparation, composition, processing, and properties of sausage of Series 1-12. *Series 1 and 2.* Two series, each consisting of five 20-pound batches of all-beef sausage, were prepared to study the effect of individual customary curing agents on the heating of meat during chopping and on binding. The 5 batches in Series 1 included one prepared without curing agents, and others cured only with sodium chloride, sodium nitrate, sodium nitrite, or sugar. The concentrations employed were in the range of those customarily used in sausage formulas. The 5 batches in Series 2 included one prepared without curing agents, and batches cured only with sodium chloride added at the levels of 1.5, 3.0, 4.5, and 6.0-pounds of sodium chloride per 100 pounds of meat. Data on temperatures attained by meat emulsions during comminution, shrinkage of sausage during smoking and cooking, and the tensile strength values of samples of the products, are shown in Table 2.

Series 3, 4, and 5. Three series, each consisting of either 3 or 4 batches of bologna, were prepared during an investigation of the effect of phosphates on binding, and the temperatures of emulsions undergoing comminution. One batch in each series was cured only with the curing mixture; the others contained, in addition, different mixtures of phosphates. The mixtures employed included one of 25% sodium hexametaphosphate (SHP), 65% tetrasodium pyrophosphate (TSPP), and 10% sodium acid pyrophosphate (SAPP) (Series 3 and 4); another of 25% potassium polymetaphosphate (KPP), 65% tetrasodium pyrophosphate (TSPP), and 10% sodium acid pyrophosphate (SAPP) (Series 5); and another which was a com-

mercial preparation (Series 3, 4, and 5). The weights of meat and ice used per batch in preparing the 3 series are shown in Table 1. Information obtained on the composition, processing, and properties of the bologna is given in Table 3.

Series 6, 7, 8, and 9. Four series, each of which consisted of three or more approximately 60-pound batches (each yielding eight approximately 7-pounds bolognas per batch) of bologna were prepared in an investigation of the effect of phosphates

TABLE 2

Effects of ordinary curing agents on binding of all-beef sausage and emulsion temperatures during comminution

Series	Batch number	Curing agents per 100 lb. meat	Comminution		Shrinkage	Mean tensile strength[2]
			Temperature[1]	Time		
			° F.	Min.	%	g.
1	1	none	55.0	8	11.2	365
	2	7.09 g. (¼ oz.) sodium nitrite	53.5	8	11.2	365
	3	56.7 g. (2 oz.) sodium nitrate	56.5	8	10.4	350
	4	113.5 g. (4 oz.) cane sugar	55.0	8	11.0	340
	5	908.0 g. (2 lb.) sodium chloride	62.5	8	9.7	960
2	1	none	55.0	10	14.0	425
	2	681.0 g. (1.5 lb.) sodium chloride	55.0	7	13.0	695
	3	1362 g. (3.0 lb.) sodium chloride	55.0	7	10.9	1200
	4	2043 g. (4.5 lb.) sodium chloride	55.0	7	10.3	1300
	5	2724 g. (6.0 lb.) sodium chloride	55.0	7	11.0	1390

[1] The initial temperature was 32° F.

[2] Differences between the mean tensile strength values of Batch 5 and those of Batches 1–4 (Series 1) were significant at the 1% level; differences between Batches 1 and 2, and 2 and 3 (Series 2) were significant at the 5% level; and those between Batches 1 and 3, 1 and 4, and 1 and 5 were significant at the 1% level.

TABLE 3

Effects of phosphates on binding in bologna and emulsion temperatures during comminution

Series	Batch number	Phosphate added, 0.5%	Comminution		Mean tensile strength[1]
			Time	Temperature at completion	
			Min.	° F.	g.
3	1	None	12	60	430
	2	25% SHP, 65% TSPP, 10%SAPP	12	49	740
	3	Commercial	12	50	715
4	1	None	12	56	460
	2	25% SHP, 65% TSPP, 10%SAPP	17	56	615
	3	Commercial	17	56	620
	4	25% KPP, 65% TSPP, 10% SAPP	17	56	635
5	1	None	10	56	390
	2	Commercial	13	56	690
	3	25% KPP, 65% TSPP, 10% SAPP	13	56	630

[1] In each series the differences between the mean tensile strength values of samples of batches prepared with and without phosphates was significant at the 1% level.

on the shrinkage and color of normally processed bologna and the shrinkage of bologna subjected to unusual heating. The weights of meat and ice used in preparing each batch are shown in Table 1. Each series consisted of a batch cured only with the curing mixture, and others cured with this mixture plus either the commercial phosphate mixture, a mixture composed of 70% tetrasodium- (TSPP) and 30% sodium acid- (SAPP) pyrophosphates or sodium hexametaphosphate (SHP). The stuffed sausages in each series were held overnight and were then smoked and cooked to an internal temperature of 150° F. (65.6° C.) which required approximately 5 hours. The color and pH values of the products were determined and data on shrinkage were obtained. The bologna in Series 8 were reheated to produce a final internal temperature of 160° F. (71.1° C.), and the bologna were again weighed to obtain data on shrinkage during the second heating. A variation of the procedure of smoking and cooking was used in preparing the batches of Series 9. Four of the bologna representing each batch were smoked and cooked to an internal temperature of 150° F. in 3 hours and 50 minutes and four others were smoked and cooked to this same internal temperature in 7 hours. A summary of the results showing the pH, the mean color values, and the mean shrinkage of the bologna in the four series is presented in Table 4.

TABLE 4

Effect of phosphates on the shrinkage and color of bologna

Series	Batch number	Phosphate added	pH	Mean color value	Mean shrinkage[1]	
					Heated to 150° F.[2]	Heated to 160° F.
					%	%
6	1	None	6.15	2.30	4.92	.....
	2	Commercial	6.35	2.41	4.94	.....
	3	70% TSPP–30 % SAPP	6.20	2.33	4.98	.....
7	1	None	6.30	2.42	3.32	.....
	2	Commercial	6.50	2.44	3.29	.....
	3	70% TSPP–30 % SAPP	6.40	2.48	3.39	.....
8	1	None	6.15	2.37	6.83	2.23[3]
	2	Commercial	6.30	2.42	6.96	1.85
	3	70% TSPP–30 % SAPP	6.25	2.37	6.95	1.94
9	1_s[4]	None	6.15	2.13	5.43	.....
	1_r	None	6.15	2.10	5.17	.....
	2_s	70% TSPP–30 % SAPP	6.20	2.11	5.64	.....
	2_r	70% TSPP–30 % SAPP	6.20	2.11	5.17	.....
	3_s	SHP	6.10	2.05	5.69	.....
	3_r	SHP	6.10	2.09	5.17	.....

[1] Mean shrinkage of 8 bologna, except that means of bologna in Series 9 were based on 4 bologna.

[2] Differences between mean shrinkage of batches comprising each of the Series 6–9 were not significant; the difference between the mean shrinkage of the group of batches 1_s, 2_s, and 3_s and that of the group of batches 1_r, 2_r, and 3_r, 5.59 and 5.13% respectively, of Series 9 was significant at the 1% level.

[3] Differences between the mean shrinkage of Batch 1 and 2, 0.38% and Batches 1 and 3, 0.29%, respectively, of Series 8 exceeded 0.22 and 0.25%, respectively, required for significance at the 1% level.

[4] 1_s, 2_s, and 3_s smoked and cooked in 7 hours; 1_r, 2_r, and 3_r smoked and cooked in 3½ hours.

Series 10. This series also was prepared in investigating the effects of phosphates on binding. A batch cured only with the curing mixture and another with, in addition, a mixture consisting of 25% sodium hexametaphosphate (SHP), 65% tetrasodium- (TSPP), and 10% sodium acid- (SAPP) pyrophosphates were prepared. The weights of meat and ice used are shown in Table 1. Both batches were smoked and cooked until an internal temperature of 160° F. was obtained. A photograph of representative samples of the batches is shown in Figure 2.

Series 11 and 12. These series were prepared in an investigation of the effect of some of the phosphates on the color of frankfurters, with emphasis being given to determining the effect of varying the rate of heating during smoking and cooking operations.

Series 11 consisted of 3 batches, each of which was prepared from the weights of meat and ice shown in Table 1. One batch was cured only with the ordinary cure (Treatment 1), while the other two were cured with, in addition, either the commercial phosphate mixture (Treatment 2), or a mixture com-

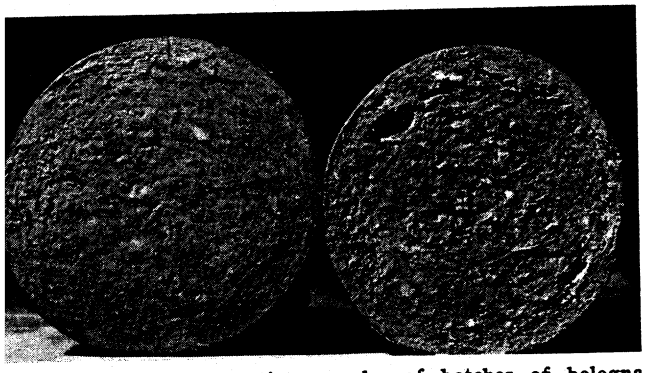

Figure 2. Representative samples of batches of bologna containing, left, 0.5% by weight of a phosphate mixture (consisting of 25% sodium hexametaphosphate, 65% tetrasodium- and 10% sodium acid pyrophosphates) and, right, no phosphate.

posed of 70% tetrasodium- (TSPP) and 30% sodium acid- (SAPP) pyrophosphates (Treatment 3). Each batch of frankfurters, after stuffing, was separated into three approximately equal portions and one of these was placed in each of 3 lots, designated as Lots a, b, and c. Lot a, after storage for approximately 45 minutes at room temperature, was smoked and cooked in 98 minutes; Lot b, after storage for approximately 160 minutes at room temperature, was smoked and cooked for 113 minutes; and Lot c, after over-night storage (approximately 20 hours) at 37° F. (2.7° C.), was smoked and cooked in 43 minutes. The color and pH values of samples of the frankfurters were determined. Data showing the means of these values and the results of a statistical analysis of differences in color values are shown in Table 5.

The preparation of Series 12 was begun by producing a single batch of meat emulsion from materials which included 25, 25, and 16 pounds of lean beef, pork trimmings, and ice, respectively. This large batch was chopped in the silent cutter until a temperature of only 40° F. (4.4° C.) was obtained, after which it was separated into five 13.2-pound portions. To each of four of the portions a different phosphate, or phosphate mixture, was added, the additive being 70 and 30% (Treatment 2), and 90 and 10% (Treatment 3) of tetrasodium- (TSPP) and sodium acid (SAPP) pyrophosphates, respectively, sodium hexametaphosphate (SHP) (Treatment 4), and the commercial mixture (Treatment 5). Each portion was returned to the silent cutter and further chopped until the emulsion attained a temperature of 56° F. (13.3° C.). After the portions were stuffed into casings, half was held for approximately 10 minutes at room temperature and then smoked and cooked in 50 minutes (Lot a), and half was held for approximately 90 minutes and then smoked and cooked in 100 minutes (Lot b). Mean color and pH values were determined. These results and the results of a statistical analysis of difference in color values are shown in Table 5.

DISCUSSION

Effects of ordinary curing agents. Data presented in Table 2 show the effects of ordinary curing agents added individually at customary levels to all-beef

TABLE 5

Effect of phosphates and processing variables on the color of frankfurters

Series	Lot	Processing time: Tempering: Before stuffing	Processing time: Tempering: After stuffing	Processing time: Smoking and cooking	Treatment: No.	Treatment: Phosphate	Color: Mean of 10 values	Color: Relation to other treatments: Comparison of means	Color: Differences: Found	Color: Differences: Req. for significance	pH of product
		Min.	*Min.*	*Min.*							
11	a	45	45	98	1	None	2.093	>2[1]	0.038	0.0365	6.10
						Commercial	2.055	>3[1]	0.175	0.0531	
					2			>3[1]	0.137	0.0327	6.25
					3	80% TSPP–20% SAPP	1.918				6.30
	b	45	160	113	1	None	2.123	>2	0.033	0.0428	6.10
								>3	0.035	0.0462	
					2	Commercial	2.090	>3	0.002	0.0496	6.25
					3	80% TSPP–20% SAPP	2.088				6.30
	c	45	1200	43	1	None	2.069	<2	0.037	0.0380	6.10
								>3	0.033	0.0544	
					2	Commercial	2.106	>3[1]	0.070	0.0533	6.25
					3	80% TSPP–20% SAPP	2.036				6.30
12	a	60	10	50	1	None	2.181	>2[1]	0.310	0.0609	6.0
								>3[1]	0.288	0.0530	
								>4[1]	0.113	0.0661	
								>5	0.056	0.0730	
					2	70% TSPP–30% SAPP	1.871	<3	0.018	0.0495	6.15
								<4[1]	0.197	0.0610	
								<5[1]	0.254	0.0683	
					3	90% TSPP–10% SAPP	1.893	<4[1]	0.175	0.0567	6.25
								<5[1]	0.232	0.0642	
					4	SHP	2.068	<5	0.057	0.0756	6.0
					5	Commercial	2.125				6.20
	b	60	90	100	1	None	2.339	<2[1]	0.120	0.0693	6.0
								<3	0.028	0.1010	
								<4[1]	0.107	0.0917	
								<5	0.017	0.0848	
					2	70% TSPP–30% SAPP	2.459	>3	0.092	0.1260	6.15
								>4	0.013	0.0964	
								>5[1]	0.103	0.0902	
					3	90% TSPP–10% SAPP	2.367	<4	0.079	0.1218	6.25
								>5	0.011	0.1159	
					4	SHP	2.446	>5	0.090	0.1070	6.0
					5	Commercial	2.356				6.20

[1] Denotes significance at the 5% level.

sausage on the development of heat during comminution, the retention of moisture during smoking and cooking, and cohesiveness, as indicated by tensile strength values. Only the addition of sodium chloride appreciably affected these properties. It increased both cohesiveness and the retention of moisture and was responsible for the development of heat during comminution. Markedly increased tensile strength values were obtained on increasing concentrations of sodium chloride from 0 to approximately 3%; further increases of concentration to approximately 4.5 to 6% produced smaller effects which were not significant.

Effects of phosphates on time-temperature relations in chopping and on tensile strength. As shown in Table 3, the addition of each of three combinations of phosphates considerably modified the action of the curing mixture. The data show that the tensile strength, or cohesiveness, of the bologna containing added phosphates was significantly greater than that of bologna cured only with ordinary curing agents. Also, it is evident that the rate at which the temperature of emulsions increased during comminution in the silent cutter was markedly less in the presence of the phosphates tested. This difference was such that the temperature of emulsions prepared with and without phosphates differed by as much as 11° F. (6.1° C.) after 12 minutes of chopping (Series 3). Owing to this same effect, phosphate-treated batches were chopped as much as 5 minutes more than batches containing no phosphates, when the batches in Series 4 and 5 were comminuted until the emulsions attained a temperature of 56° F. (13.3° C.).

Binding of moisture. The results presented in Table 4 indicate that the inclusion in the formulas of bologna of either the commercial phosphate, a mixture of 70% tetrasodium pyrophosphate (TSPP)—30% sodium acid pyrophosphate (SAPP), or of sodium hexametaphosphate (SHP), had no significant effect on moisture losses, or shrinkage, when the sausages were smoked and cooked to a maximum internal temperature of 150° F. (65.6° C.). Results of a statistical analysis based on the data indicated that differences between the mean shrinkage of treatments as small as 0.20–0.31% would have been significant under the conditions employed. Thus, on preparing bologna from meats capable of yielding well-bound products and heat-processing these products to obtain a maximum internal temperature which lies in the range considered normal and desirable, the addition of phosphates produced no significant effect on shrinkage. These results support in part the conclusions of Wilson *(3)*.

In contrast, bologna containing added phosphates shrunk significantly less than bologna treated only with normal curing agents, when the bologna in Series 8 were heated to the higher maximum internal temperature of 160° F. (71.1° C.). A photograph (Figure 2) of cross-sections of two bologna from lots processed in Series 10, both of which had been heated to a maximum internal temperature of 160° F., shows that, under these conditions, phosphate-treated bologna (sample at left) had a normal appearance, whereas bologna containing no phosphate-additive (sample at right) had a poor physical structure.

The detrimental effect on binding of overheating sausage is well-known in the industry *(4)*; consequently, heating to internal temperatures much in excess of 150° F. is avoided. A basis for assuming that the addition of phosphates would reduce shrinkage in products heated to 160° F. was provided in previously reported results *(2)*. The earlier results indicated that evaporation was reduced by the addition of phosphates to ground lean meat and water mixed in the proportion 2:1. Samples in these experiments were heated for 2 hours in an oven held at 167° F. (75° C.). The present results indicate that a reduction of shrinkage due to evaporation occurred in a commercial-type product only when the products were heated to an extent normally considered excessive. While the experimental condition of heating the center of products to an internal temperature of 160° F. is seldom realized commercially, heating external portions to this or greater temperatures is to be expected when high temperatures are applied to achieve rapid smoking and cooking. The results are consistent with the conclusion that the use of phosphates increases binding and that their use can be of value in efforts to decrease the time required in smoking and cooking. Calculations were made on the shrinkage of the bologna in the slowly heated and rapidly heated batches in Series 9. It was found that 0.46%, the difference between 5.13 and 5.59%, the means of the shrinkage of the bologna in the rapidly heat-processed group (Batches 1_r, 2_r, and 3_r) and the slowly heat-processed group (Batches 1_s, 2_s, and 3_s), respectively, was significant at the 1% level. This result supports the belief advanced by some sausage technicians that rapid heat processing decreases moisture losses, or smokehouse shrinkage.

Color development. The differences between the mean color values of bologna in batches of each of the series comprising Series 6–9 were not significant. Interpreted in the light of the results obtained in the studies of the development of color in frankfurters which are described in the following paragraphs, this result suggests that any tendency of phosphate treatments to influence the development of cured meat color was minimized or eliminated owing to the relatively slow process involved in smoking and cooking bologna.

In contrast, the data presented in Table 5 indicate that the relative effect on color of adding phosphates to frankfurters was marked in some cases, and that the effect was appreciably influenced by varying time and temperature during processing. This is indicated by the different order of effectiveness of the three treatments applied in Series 11, when the frankfurters were processed differently in Lots a, b, and c. The results show that the frankfurters prepared without phosphates (Treatment 1) had a higher mean color value than that of frankfurters treated with either

commercial or pyro-mixtures of phosphates (Treatments 2 and 3, respectively), when smoking and cooking the sausages was begun approximately 45 minutes after stuffing, and finished in 98 minutes (Lot a). This difference was significant at the 5% level. On the other hand, there were no significant differences between the mean color values of frankfurters given Treatment 1 and those given Treatments 2 and 3, when the frankfurters were either smoked and cooked 140 minutes after stuffing, and finished more slowly in 113 minutes (Lot b), or stored over-night (1200 minutes) and then smoked and cooked quickly in 43 minutes (Lot c).

Varying the processing of the frankfurters in Series 12, by providing two sets of conditions of tempering, smoking, and cooking, markedly changed the relative order of the effect of five different treatments on color development. The data indicate that there were appreciable differences between mean color values of five batches of frankfurters, which had different treatments and then were rapidly smoked and cooked in 50 minutes (Lot a). The numbers of the treatments, arranged in order of decreasing effectiveness as indicated by mean color values, were as follows: Treatments 1, 5, 4, 3, and 2. The differences between the mean color value of frankfurters prepared without added phosphates (Treatment 1) in Lot a were greater (significant at the 5% level) than the mean color values of phosphate-treated frankfurters, except that it was not significantly different from the mean color value of frankfurters treated with the commercial phosphate mixture (Treatment 5). The difference between the mean color values of frankfurters containing the commercial phosphate (Treatment 5) and those of frankfurters containing either of the two mixtures of pyrophosphates (Treatments 2 and 3); and those between the color values of frankfurters containing sodium hexametaphosphate (Treatment 4) and the color values of frankfurters containing either of the two mixtures of pyrophosphates (Treatment 2 and 3) were also found to be significant.

The data indicate that color developed more completely in the more slowly smoked and cooked frankfurters in Lot b than it did in those more rapidly heat-processed in Lot a. Even more striking, the relative order of effectiveness of the various treatments on color development was markedly changed. The treatments of bologna processed in Lot b, arranged according to treatment numbers and in order of the decreasing mean color values of the frankfurters produced by the treatments, were as follows: Treatment Nos. 2, 4, 3, 5, and 1. The differences between the color value of frankfurters containing 70% tetrasodium—30% sodium acid pyrophosphates (Treatment 2) and those of frankfurters containing no phosphate (Treatment 1), or of frankfurters containing the commercial mixture (Treatment 5) were significant. The difference between the mean color values of frankfurters containing sodium hexametaphosphate (Treatment 4) and frankfurters containing no phosphate (Treatment 1) was also significant.

The results in the foregoing indicate that the development of color in frankfurters prepared without added phosphates was greater than that in frankfurters containing phosphates when processing involved brief tempering and relatively rapid smoking and cooking. The apparent inhibition of color development by the phosphates disappeared when additional time for tempering and smoking and cooking was provided. In fact, the relative effect of treatments was reversed, and the color developed in frankfurters treated with sodium hexametaphosphate and others treated with 70% tetrasodium—30% sodium acid pyrophosphates was significantly greater than the color of frankfurters containing no phosphate when the additional time was allowed for color development. While the color of frankfurters containing the added commercial mixture was equal to that of frankfurters containing no phosphates under both sets of processing conditions (Lots a and b), the organic compound which the commercial mixture contained is assumed to have influenced color, modifying the action of those phosphates of which it was composed. Inasmuch as the results obtained with the phosphates studied indicate that the development of maximum color may constitute a problem in rapidly smoking and cooking frankfurters, the incorporation in formulas of an additional additive, such as ascorbic acid which favorably affects color development, may be advisable when a rapid smoking and cooking operation is attempted.

In view of the variance of the effects of the phosphates on shrinkage and on color development, depending on processing conditions, it appears reasonable to assume that at least some of the past confusion in the literature and in the industry concerning the action and value of the phosphate additives has resulted from a lack of appreciation of the role of processing variables. Having presented data on these effects, the present results appear to afford a basis for an improved evaluation and more rational use of phosphates in sausage-making.

SUMMARY

An investigation was conducted of the effects of ordinary curing agents and of certain phosphates employed under varied conditions on the color and binding of frankfurters and bologna. Shrinkage during smoking and cooking and cohesiveness as indicated by tensile strength measurements were employed as criteria of binding. The results of an investigation of the effect of the customary curing agents, sodium chloride, sodium nitrite, sodium nitrate, and sugar applied singly showed that only the action of sodium chloride markedly enhanced the development of heat when emulsions were prepared, the retention of moisture during heat processing, and the cohesion of meat.

The addition of three combinations of phosphates markedly increased the relative binding of sausage components, as indicated by the effect of the additives

in increasing the tensile strength, or cohesion of meat, in samples of bologna. The relative shrinkage of bologna smoked and cooked to an internal temperature lying within the range normally used in the industry was not affected by the addition of three combinations of phosphates. However, the shrinkage of bologna heated to an internal temperature of 160° F. was decreased by the action of the two combinations of phosphates which appeared to stabilize the products heated to this temperature.

Data were obtained showing that the rate at which the temperature of emulsions increased during comminution was markedly reduced in the presence of certain phosphates tested.

The results indicated that the phosphates tested tended to inhibit color development in rapidly processed frankfurters, but not in normally processed frankfurters or in bologna heat-processed at either rapid or normal rates. The color developed on addition of one phosphate and one combination of phosphates to frankfurters was superior to that obtained with ordinary cure in products heat-processed at a normal rate. Thus, depending on the length of the period allowed for color development during tempering and during smoking and cooking, the phosphate-treated frankfurters that were prepared had less, equal, or more color than frankfurters containing no added phosphates.

The results afford a basis for explaining previous contradictions and confusion regarding the merits of phosphate-additives in sausage by showing that the action of the additives was affected by processing variables.

LITERATURE CITED

1. Ramsbottom, J. M., Goeser, P. A., and Shultz, H. W. How light discolors meat; what to do about it. *Food Inds.*, 23 (2) 120 (1951).
2. Swift, C. E., and Ellis, Rex. The action of phosphates in sausage products. I. Factors affecting the water retention of phosphate-treated ground meat. *Food Tech.*, 10, 546 (1956).
3. Wilson, G. D. Additives to sausage and cured meat. Natl. Prov., (Oct.) 112 (1954).
4. University of Chicago, Institute of Meat Packing. Sausage and Ready-to-Serve Meats. Chicago, Illinois, 1951, pp. 188-9.