Solubilization of Calfskin Collagen in Citrate Buffer with the Use of Automated Equipment

LEO D. KAHN and LEE P. WITNAUER, *Eastern Utilization Research and Development Division, Agricultural Research Service, U. S. Department of Agriculture, Philadelphia, Pennsylvania 19118*

Synopsis

An automated collagen solubilizing apparatus that maintains constant electrolytic conditions during solubilization is described. It was used in solubilization of 6.95% of a calfskin corium as monomeric collagen in citrate buffer at pH 3.44 and ionic strength of 0.44 and a temperature of 8°C. It is shown that this is the limit of solubilization for undenatured collagen in this buffer.

INTRODUCTION

The method most frequently used to obtain a preparation of solubilized collagen is to place pieces of fibrous tissue in contact with a buffer solution, usually citrate buffer in the acid pH range.[1–3] Under these conditions there is a progressive loss of buffer ions from the solution phase of the system through binding to the insoluble residue of the fibrous tissue and through the Donnan effect into microscopic interstitial liquid filled pockets. To maintain a fixed electrolytic composition of the system, e.g., the peak of the salting-out curve, it is necessary to draw frequent samples as solubilization of collagen proceeds, and from pH and titration data calculate the amounts of buffer compounds that must be added to restore the initial conditions. Since this requires constant attention and gives the desired electrolytic state only immediately after each adjustment, an automated apparatus was designed and constructed which would sense and rapidly correct loss of buffer ions. This apparatus is based on the principle that any deviation in ionic composition of the solubilizing buffer will give rise to a shift in pH and/or ionic strength. The automated solubilizing apparatus therefore combines a pH-stat, plus an ionic strength-stat which is actuated by changes in conductivity. To the solubilizing mixtures of tissue and buffer these add saturated acid solution, saturated salt solution, concentrated buffer, or water as needed to restore the initial electrolytic state.

The aim of this paper is to describe this automated apparatus and its use in (a) determining the total amount of collagen that can be solubilized as monomeric collagen from calfskin corium in an aqueous citrate buffer, (b) investigating the role of the buffer ions in the solubilizing process, and

(c) deciding if there are several soluble collagens in calfskin corium which are selective in their affinities for solvents.

The investigation consisted of solubilizing the collagen of a calfskin corium in the automated apparatus with repeated changes of buffer until the exhaustion point was reached. The corium was then washed with distilled water with the intention of removing inorganic ions and then subjecting it again to the same solubilizing buffer. This step was prompted by consideration of the possibility that solubilization of collagen might be considered an ion exchange phenomenon in which buffer ions replaced collagen molecules, or competed with them for binding sites. Finally, further solubilization of collagen from the spent corium was attempted with the use of a variety of reagents which have been cited as being effective in solubilizing collagen.

EXPERIMENTAL

Apparatus

Solubilization is carried out in the mixing apparatus shown in Figure 1. The battery jar shown measures 12 in. tall and 12 in. in diameter, is re-

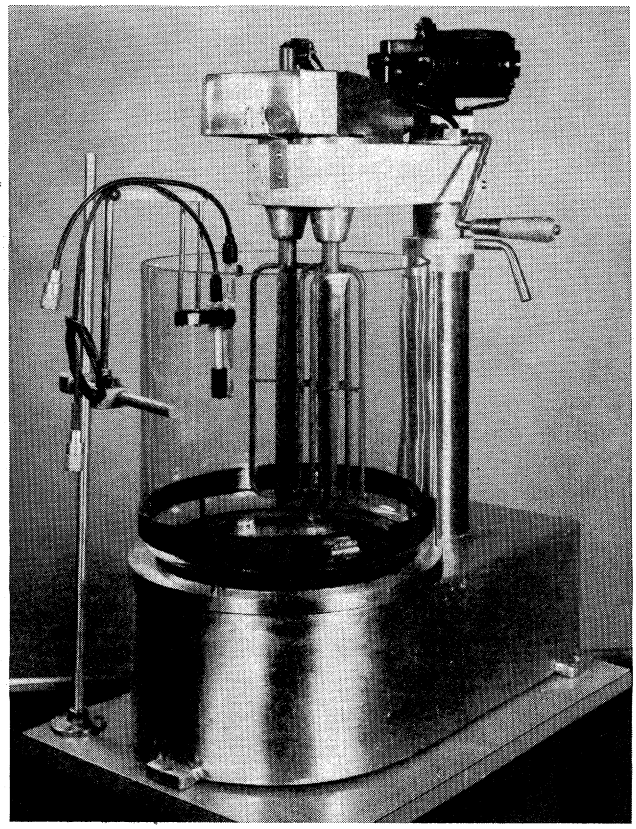

Fig. 1. Mixer and electrodes of automated apparatus for solubilizing collagen.

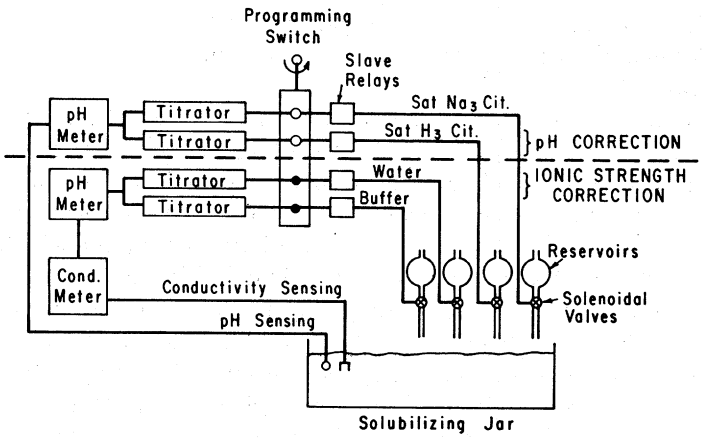

Fig. 2. Block diagram of electronic control system of automated apparatus for solubilizing collagen.

movable, and can be replaced by one of about one-half its volume when small amounts of corium are processed. Separate motors rotate the platform supporting the battery jar and the mixing blades at 1 rpm and 4 rpm, respectively. The blades are made of Teflon-covered stainless steel, and the blade assembly can be raised to a position above the top of the battery jar by means of the hand crank, and, once raised, it can be fixed in position by a clamp on the support column. When lowered into the jar the blades can be swung to any degree of eccentricity relative to the center of the jar and are usually operated very close to its wall because this gives the most thorough agitation of the contents. The upright at the left of the apparatus supports within the jar pH and conductivity sensing elements, plus a pair of electrical contacts (not shown) that limit the height of liquid in the jar so that accidental overflow is not possible.

Four 4-liter aspirator bottles serve as reservoirs for the solutions to be added as solubilization progresses and these are positioned above the mixer. Each reservoir outlet is controlled by a solenoidal valve and has a Tygon tube leading to the battery jar and terminating just above it.

The block diagram of Figure 2 shows the electronic control system. This can be considered as being made up of two sections: one to control pH and the other to control ionic strength.

The pH-sensing element is an A. H. Thomas combination electrode, model 4858-L15. This reports to a Radiometer pH meter, model 25, which in turn is connected to two-Radiometer titrators, model 11, through a Radiometer junction box, model PHA-803. The titrators are set to upper and lower pH limits respectively; thus the pH meter functions as a linear operational amplifier and the titrators as master relays which supply an electric potential at their outputs whenever their setting is exceeded. The outputs of these two titrators actuate Potter and Brumfield relays, model KCP11, which are slave relays that operate Valcor solenoidal valves

controlling the outputs of the reservoirs which hold saturated citric acid solution and saturated sodium citrate solution. The solenoidal valves are activated by 110-V AC.

The conductivity-sensing element is a Radiometer electrode, model PP1042, which has a piece of Bakelite tubing slightly larger in diameter than the electrode and about 1 in. long cemented in position so as to shield the platinum surfaces from contact with pieces of corium. This electrode reports to a Radiometer conductivity meter, model CDM-2. The conductivity meter has output terminals which give an electrical potential proportional to the conductivity reading and this is fed to a Radiometer pH meter, model 25. As in the case of the pH-controlling section, this pH meter serves as an operational amplifier to operate a chain of relays and valves, except in this case either concentrated buffer or water is added to the solubilizing mixture. Between the master and slave relays there is a Sealectro programming switch, model BP08A60T. Its purpose is to keep the pH-correcting and ionic strength-correcting sections of the apparatus from opposing each other. It is so programmed that master and slave relays of both correcting sections will not be connected at the same time but rather, in sequence for 2 min intervals each, with a 2 min quiescent period with all four circuits open between each switch-over. To prevent unwanted interactions and ground loops, isolation transformers are used in the 110-V AC feed lines going to the pH-controlling section, the ionic strength-controlling section, and also to the conductivity meter.

As a safety measure against overflow, fuses are located in the leads to the solenoidal valves. When the liquid level in the jar reaches a predetermined height, it closes the circuit between two electrical contacts. This action operates a Fisher transistorized relay, model 30, which throws a resistive overload across the solenoidal valves, thus burning out the fuse in the solenoid circuit and stopping all liquid flow into the battery jar of the mixer.

Procedure

Two preparations of solubilized collagen from separate calf-skins were made in the automated apparatus and their solubilization behavior was observed. The skins, which were obtained at time of slaughter, were processed within a few hours. The gross weight of each was roughly 25 lb. The skins were well washed in cold water and cut into square sections approximately 1 ft on a side. The hair was removed with electric clippers and all superficial fat and muscle was cut away. The corium of each skin was separated by means of a Randall microtome (Randall Leather Machinery Co., New York, N. Y.) and then cut into approximately 1-in. squares with scissors. Up to this point the skins were kept in ice water when not being worked on. The diced corium was then placed in the solubilizer located in a cold room at 8°C and 2 liters of citrate buffer were added. The buffer had been adjusted to pH 3.44 and 0.44 ionic strength and included one part of merthiolate per 10,000 as a preservative. The given

value of ionic strength was selected because it was found to be the peak of the salting-in curve.

The amount of superficial water clinging to the corium was determined by the extent to which the buffer was diluted when the corium was added to it. This was measured by immediately removing a sample of buffer and titrating it against standard alkali.

The automated equipment was set to restore and maintain the original electrolytic state. As solubilization progressed, aliquots of about 2 ml of the solution were drawn at intervals of several days, and collagen concentration was measured via Kjeldahl nitrogen determination on the basis that collagen contains 17.5% nitrogen.[3] When the collagen solution became so thick that motion of the pieces within the mixture became difficult, the collagen solution was drawn off, the portions clinging to the pieces of corium being removed by expressing between glass rods as suggested by Belisario and Jahn.[4] The pieces of corium were returned to the jar of the automated apparatus, fresh buffer was added and the above process was repeated several times until no more collagen could be solubilized. This gave four separate batches of solubilized collagen preparation.

The collagen solution was centrifuged for 2 hr at 20,000 rpm and 8°C in the No. 21 rotor of a Beckman Model L centrifuge to remove suspended debris and was subsequently filtered through the stainless steel grid of a Millipore filter holder, model XX40-047-00, i.e., the filter holder assembled without a filter disk, to remove the fat globules which formed on the surface of the solution during centrifugation. The solution was stored in jars at cold room temperature sealed with Parafilm, as it has been observed that molds sometimes form on collagen solutions stored in tightly capped jars.

The collagen solutions were verified by sedimentation data and electron microscopy. Sedimentation patterns obtained on a Spinco Model E ultracentrifuge showed a single hypersharp peak with a sedimentation constant of 2.9 S when reduced to conditions of water at 20°C. The number-average and z-average molecular weights of one preparation were determined from sedimentation-equilibrium data and these were 320 and 308×10^3, respectively. These values are within the limits of experimental uncertainty. Fibrils for electron microscopy were obtained by dialyzing a portion of each batch of solubilized collagen preparation to exhaustion of the electrolyte. The resulting precipitates were mounted on carbon-coated grids and stained with phosphotungstic acid and uranyl acetate. In all cases the fibrils showed the classical collagen structure.

The exhausted pieces of corium were returned to the jar of the automated apparatus and washed with repeated changes of distilled water until no more ions could be removed, as indicated by measurement of electrical conductivity of the wash water. The pieces of corium were then drained of excess water and further solubilization was attempted with the same buffer as before. When it was seen that this yielded no further solubilized product, the pieces of corium were again thoroughly washed, and separate portions were placed in contact with each of the following agents at a tem-

perature of 8°C for 1 week: alkaline phosphate buffer at pH 8.4 and ionic strength 0.44; 0.1*M* acetic acid; acetate buffer at pH 3.5 and ionic strength 0.45; and glacial acetic acid. One portion of the corium was placed in 5% calcium chloride solution; after 24 hr the liquid was drained and the corium was placed in 0.3% monochloracetic acid for 2 days as in the solubilizing technique of Comte.[5]

The ability of enzymes to promote further solubilization was investigated. A portion of the exhausted corium was placed in a 0.5% solution of hyaluronidase in acetate buffer at pH 5.2 and ionic strength 0.25 and at room temperature for 3 days as suggested by Jackson.[6] The corium was then removed, drained, washed, covered with the citrate buffer used in the initial solubilization, and allowed to stand at 8°C for 3 days. The solubilization technique of Nishihara[7–9] was attempted by employing a 0.3% solution of α-amylase in phosphate buffer at pH 5.2 and ionic strength 0.10 at room temperature for 4 days. Then solubilization was again attempted with the original citrate buffer at 8°C.

Finally, a portion of the spent corium was treated with 5% sodium hydroxide solution saturated with sodium sulfate for 2 days at room temperature in hope of solubilizing the eucollagen described by Courts.[10]

RESULTS AND DISCUSSION

The rate of solubilization of one skin is shown in Figure 3 where collagen concentration is plotted versus time of contact between corium and buffer solution. The uppermost curve represents the first batch of solubilized collagen preparation obtained and ends at the time that batch was drawn off. Each lower curve in order represents a succeeding batch as the process was repeated to give a total of four batches.

Both calfskins used in this research gave approximately the same yields of preparation in each batch. Values for the skin depicted in Figure 3 are as follows: the first draw-off gave 1200 ml of collagen solution at a collagen

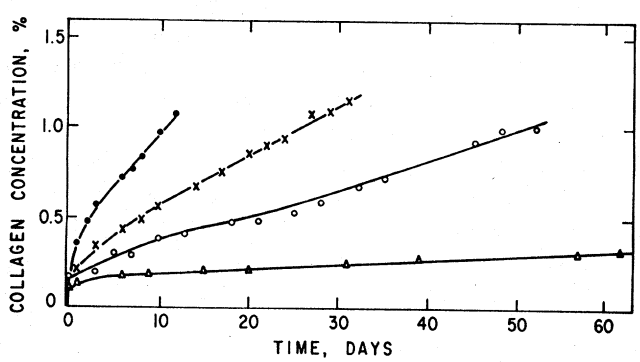

Fig. 3. Graph showing rate of solubilization of calfskin collagen in automated solubilizing apparatus: (●) 1st extraction; (×) 2nd extraction; (○) 3rd extraction; (△) 4th extraction.

concentration of 1.08%; the second gave 800 ml at a concentration of 1.16%; the third gave 1200 ml at a concentration of 1.01%; and the fourth draw-off gave 2200 ml of collagen solution at a concentration of 0.3%. During the subsequent washing process an additional 2.7 g of collagen was solubilized. This amounts to a total yield of 46.9 g of collagen in solution, which is 6.95% of the mass of the dry corium, which was 674 g.

During the first 4 days of solubilization the pieces of corium swelled to two to four times their original thickness. From then on until the end of the solubilization they shrank and tended to take on a translucent, parchmentlike appearance, but never reached a thickness less than about twice the original one. As solubilization progressed many small granular shreds of skin became scattered throughout the liquid phase. This leads to the opinion that the collagen going into solution was originally present in the skin as a three-dimensional network interspersed between islands of less soluble material which were released as scattered shreds as the soluble net was removed. When washed in repeated changes of distilled water the pieces of corium swelled again and became white and opaque. About one-half of them became fuzzy and feltlike in appearance and tended to split into two laminar pieces. When restored to citrate buffer, they shrank somewhat and again took on the parchmentlike appearance previously mentioned.

After each skin was exhausted by the initial four contacts with citrate buffer, no further collagen was solubilized by any of the agents in the acid range nor by the alkaline buffer. The latter was used to see if there are independent acid-soluble and alkali-soluble collagens. Where citrate buffer was again used after washing the exhausted corium and in the cases where acetate buffer, 0.1*M* acetic acid and phosphate buffer were used, dialysis of the liquid to exhaustion of electrolyte yielded no precipitate of collagen fibers, which was also the result when hyaluronidase was employed. The use of glacial acetic acid, monochloracetic acid, sodium hydroxide, and α-amylase produced a dissolving of the pieces of corium to form a thick clear gel, and in the case of sodium hydroxide this was accompanied by a strong odor of ammonia. However, further dilution of these gels with water and repeated dialysis against water failed to produce a precipitate. From this it is concluded that all of the collagen in the corium that is amenable to solubilization was progressively solubilized by the citrate buffer in the initial stages. It must be emphasized that this is undenatured collagen, as shown by the criteria previously mentioned. A much larger fraction of the corium could have been solubilized as gelatin by working at an elevated temperature or by introducing a denaturing agent such as potassium thiocyanate, but this was outside of the aim of this research.

Mazurov and Orekhovich[11] have reported that after solubilizing rat skin for 9 days in citrate buffer in the acid range they reached a limiting point. Then the citrate buffer was replaced with acetate buffer and further extensive solubilization ensued. These investigators are of the opinion, however, that both yields of solubilized collagen are structurally identical. This

difference in solubility behavior of collagen from what is now being reported could be due to the two features which distinguish the method for solubilizing collagen here described from all others thus far noted in the literature, viz., the use of the Randall microtome to eliminate unwanted layers of the skin leaving only the corium, and maintenance of constant electrolytic conditions (the peak of the salting-out curve) during the solubilization process by means of automated equipment.

The authors wish to thank Robert J. Carroll for making the electron micrographs, Samuel J. Viola for operating the Randall microtome, and Robert R. Calhoun for designing and constructing the mixer shown in Figure 1.

The mention of commercial materials and equipment is for the reader's reference and convenience; it is not intended to imply an endorsement over others of a similar nature not mentioned.

References

1. V. N. Orekhovich, A. A. Tustanovskii, K. D. Orekhovich, and N. E. Plotnikova, *Biokhimiya*, **13**, 55 (1948).
2. V. N. Orekhovich and V. O. Shpikiter, *Science*, **127**, 1371 (1958).
3. P. M. Gallop, *Arch. Biochem. Biophys.*, **54**, 486 (1955).
4. T. M. Belisario and A. S. Jahn, *J. Amer. Leather Chem. Soc.*, **60**, 393 (1965).
5. P. Comte, F. Balme, and L. Villa, *Bull. Assoc. Franc. Ingrs. Chemistes, Techniciens Ind. Cuir Doc. Inform. Centre Tech. Cuir*, **25**, 99, 141 (1963).
6. D. S. Jackson, *Biochem. J.*, **54**, 638 (1953).
7. T. Nishihara, Japanese Pat. 9295/63 (June 15, 1963).
8. F. S. Steven, *Ann. Rheum. Dis.*, **23**, 300 (1964).
9. J. A. Chapman and F. Steven, in *Symposium International sur la Biochemie et la Physiologie due Tissue Conjonctif*, P. Compte, Ed., Secretariat des Amis de l'Université de Lyon, Lyon, 1966, p, 265.
10. A. Courts, *Biochem. J.*, **74**, 238 (1960).
11. V. I. Mazurov and V. N. Orekhovich, *Biokhimiya*, **24**, 28 (1959).

Received June 29, 1968
Revised August 6, 1968