Continuous Hydrolysis of Tallow with Immobilized Lipase in a Microporous Membrane

Thermostable lipase from *Thermomyces lanuginosus* was immobilized in untreated microporous membranes. Melted tallow pumped through the membrane did not wash the enzyme out. From 0.4 to 0.9% of the soluble activity remained after immobilization with half-lives of 1–2 months or more at 50°C. Membranes can be acid/base washed and reloaded with enzyme with no adverse effects. Buffer was required for a long half-life, and recycling the buffer improved the mass transfer of glycerol out of the immobilized lipase reactor. Immobilized activity was unaffected when the pH of the aqueous product changed from 5.5 to 6.5.

INTRODUCTION

Tallow, the major product of rendering, is the feedstock for about 80% of industrial hydrolysis of fats and oils (fat splitting), which yields about one billion pounds of fatty acids per year in the United States.[1] Recently there has been increased interest in the application of lipases to the fats and oils industry.[2] The main advantages of lipases over conventional high-pressure steam for fat splitting are a cleaner product due to a more specific reaction and a lower energy requirement. A continuous process based on immobilized enzyme is preferred over batch methods because it would require less enzyme, smaller reactors, and less labor. One approach to overcoming the severe mass transfer limitation of immobilized lipases is to replace the immiscible fat or oil with a water-soluble fatty ester such as tripropionin[3] or 3-chloro-2-methylpropanolpropionate.[4] Another is to use an organic solvent in which the fat or oil and enough water for hydrolysis are both soluble.[5] Some solvents are particularly suitable for low-water systems where interesterification with no net hydrolysis is desired.[6,7] The most frequently employed system is to replace the soluble enzyme in a stirred emulsion with an insoluble support loaded with enzyme.[8–16] Although this system facilitates enzyme recovery and reuse, a semicontinuous repeated batch process has none of the other advantages of immobilized enzyme systems. When an emulsion was fed to a fluidized[17] or packed[8] bed, the emulsion tended to separate and channel unless a high flowrate was maintained. High conversion was possible only by numerous passes with intermediate reemulsification.[8]

In this study lipase was immobilized in a membrane that was then operated as a reactor, with oil on one side of the membrane and aqueous phase on the other side. Reactants entered the reactor as separate streams and *no emulsion was required*. Hoq et al.[18–20] have demonstrated synthesis of mono- and diacylglyercols and hydrolysis of olive oil in a similar reactor in which there was no bulk flow through the membrane. A thermostable lipase was necessary for this study because tallow does not melt below 40°C. The primary objective of this study was to demonstrate continuous hydrolysis of tallow at 50°C with an immobilized lipase.

MATERIALS AND METHODS

Activity of lipase in solution was measured by an olive oil emulsion method[21] and expressed as international units (IU) or IU/mL. The protein concentration of enzyme solutions was measured by the Lowry method[22] with bovine serum albumin as a standard. Glycerol concentrations were measured using a coupled enzyme assay (Boehringer Mannheim Cat. No. 148270) in a Gilford Model 2000 recording spectrophotometer. (Reference to brand or firm name does not constitute endorsement by the U.S. Department of Agriculture over others of a similar nature not mentioned.) The acid concentration of fresh or partially hydrolyzed tallow was measured by placing 0.5–2.0 g in a tared ½-oz vial, weighing, adding 6.67 mL of 40% hexane and 60% ethanol (95%, pH 10.4), and titrating to pH 10.4 with a Metrohm automatic titrator.

Bleached, inedible tallow was obtained from Chemol, Inc., Greensboro, NC. It contained less than 0.1% moisture (Karl Fisher method) and about 2% free fatty

acid. After mixing with approximately 5 g/L Celite filtering aid and 5 g/L Filtrol bleaching clay, it was filtered before use. Thermostable lipase was obtained by 10-L batch fermentation of *Thermomyces lanuginosus,* QM 225, USDA, Northern Regional Research Laboratory, Peoria, IL. This fungus exhibits properties very similar to those reported for *Humicola lanuginosus,* S-38.[23] A series of papers describes the production, purification, and characterization of a thermostable lipase from that source.[24–30] Reactors consisted of pleated capsule filters, Product No. 12117 made by Gelman Sciences, Inc., Ann Arbor, MI (see Fig. 1).

Between 150 and 2000 mL crude fermentation culture filtrate (pH 7.5–8.5) was passed through the capsule at room temperature by gravity feed (approximately 10 mL/min). See Figure 2A. The microfiltration filtrate was collected in several fractions that were assayed for lipase activity and protein. After the last of the enzyme solution had drained from the capsule, melted tallow (45–50°C) was poured into either the inside or outside of the pleated filter element, depending on the method of operation (see Figs. 2B and 2C). In operation, tallow entered the bottom of the reactor,

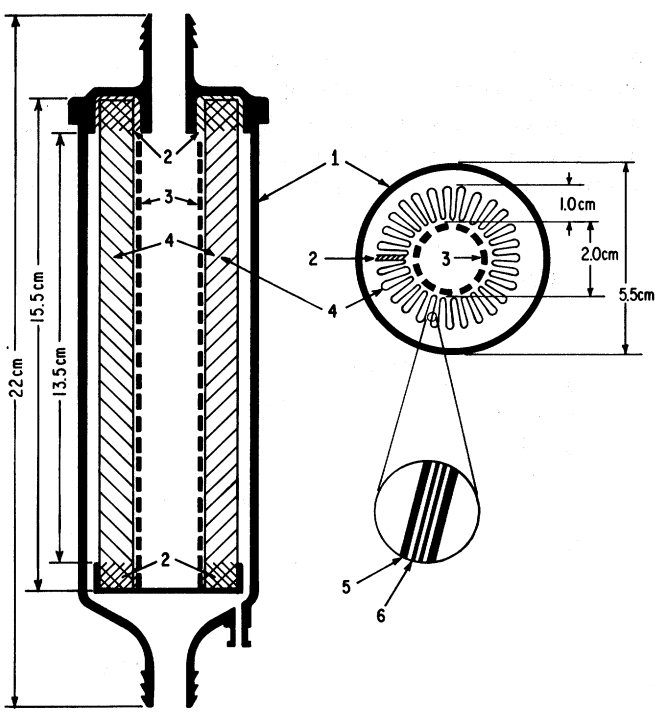

1. Polycarbonate shell.
2. Polyurethane glue.
3. Perforated support tube.
4. Pleated filter element (4 layers). Actual capsule contains 57 pleats.
5. Non-woven polyester fabric support layer (thickness about 0.25 mm).
6. Microporous membrane (acrylic, cast on nylon fabric, 0.2 micron pores, thickness about 0.1 mm).

Figure 1. Cutaway views of Gelman pleated capsule filter; total effective filtration area, 1480 cm^2.

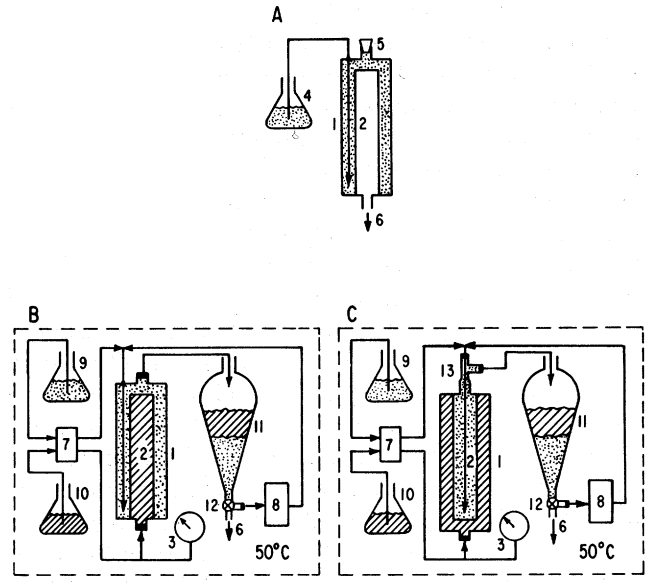

1. Capsule filter (Gelman #12117)
2. Pleated filter element (glued in place)
3. Pressure gauge
4. Enzyme reservoir (gravity feed)
5. Stopper
6. Sample collection
7. Peristaltic pump (Technicon Industrial Systems, Tarrytown, N.Y.)
8. Recycle pump (optional)
9. Buffer reservoir
10. Tallow reservoir
11. Separatory funnel (2 L)
12. Three-way valve
13. Tee connector

Figure 2. Diagram of lipase membrane reactor Setup for (A) loading; (B) operating, method I (oil inside); (C) operating, method II (oil outside).

passed through the membrane, floated to the top, and exited with the aqueous phase as a coarse mixture (not an emulsion) that readily separated in the separatory funnel. The aqueous feed rate varied from 0.09 to 0.15 mL/min, and the tallow feed rate varied from 0.09 to 0.22 g/min. Conversion of tallow varied from a few percent to 35% depending on the activity and tallow feed rate.

After continuous operation for up to 4 months, the reactors were washed by alternate rinsing with hot (about 60°C) 5% H_2SO_4 and 5% KOH until solutions were clear. After rinsing with distilled water and checking for leaks (bubble test with air at about 10 psi), the reactors were reloaded with enzyme as described above. The partially hydrolyzed tallow produced by the reactors was collected and, in some experiments, used as feed material instead of freshly filtered tallow.

Samples were drained from the separatory funnel once a day, and the weight of tallow and volume of aqueous product were measured to determine the average feed flowrates. The activity of the reactor was

calculated as the difference in acid concentration between the partially hydrolyzed tallow produced and the fresh or partially hydrolyzed tallow feed (μmol/g) multiplied by the tallow feed rate (g/min) to give units of immobilized activity (μmol/min). The glycerol concentration and pH of the aqueous product were measured twice a week in most experiments. Glycerol concentration ranged from 0.3 to 15 g/L. Glycerol activity was calculated as the glycerol concentration (μmol/mL) multiplied by the aqueous feed rate (mL/min) to give units of activity (μmol/min). For comparison to activity based on fatty acid, glycerol activity was multiplied by 3 because complete hydrolysis yields only one-third mole of glycerol for each mole of fatty acid. The difference between fatty acid activity and glycerol activity ($\times 3$) was an indication of mono- and diacylglycerols produced. The aqueous product was also analyzed for protein and lipase activity for the first day or two after enzyme loading. Occasionally, the following experiment was performed to check for lipase activity in the products. After measuring the acid concentration of the tallow in the separatory funnel, the entire contents of the funnel (tallow and aqueous) were placed in a flask and stirred vigorously for 24 h at 50°C. The emulsion was then allowed to separate, and the acid concentration was measured again. Any increase in the acid concentration after stirring for 24 h would indicate lipase activity.

RESULTS

Results are summarized in Table I. More detailed data for experiments 2 and 11 are shown in Figures 3 and 4. All four capsules were still usable at the time of writing, one (capsule A) having been used almost continuously for 14 months. As shown in Table I, the recovered filtrate (sum of several fractions in most cases) amounted to 5–37% of the total lipase activity used and 68–106% of the total protein used. During loading of the enzyme into the reactor, there was no significant change in the activity and protein of successive fractions in any experiment. Also, there was no noticeable change in flowrate at constant pressure head during gravity feed filtration of enzyme. Thus, there was no evidence either of clogging or saturation of the membrane with enzyme, even when 2000 mL crude enzyme was filtered (experiment 11).

The percentage of protein recovery listed in Table I includes that contained in the aqueous product from the first day or two of operation, although this never amounted to more than a few percent. No protein could be detected in the aqueous product after the first several days. The lipase assay was not sensitive enough to detect any active lipase in the aqueous product, even from the first day. Using the more sensitive method of emulsifying the entire contents of the separatory funnel, which would also detect active enzyme dissolved

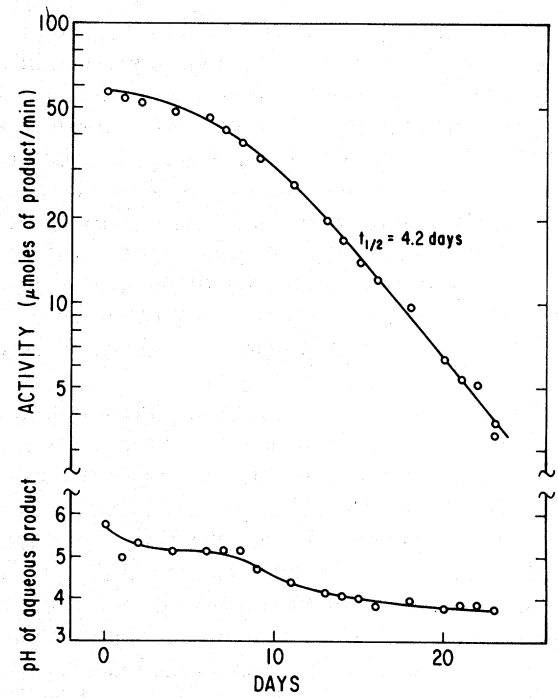

Figure 3. Activity and pH of lipase membrane reactor with calcium chloride (experiment 2, Table I). Flowrates: 0.105 (s = 0.022) mL/min 5mM $CaCl_2$, 0.227 (s = 0.009) g/min tallow, 50°C.

or suspended in the tallow product, active enzyme amounting to less than 1% of the activity used was found in products of the first day's operation. When this test was performed after the first few days operation, no active enzyme could be detected leaking from

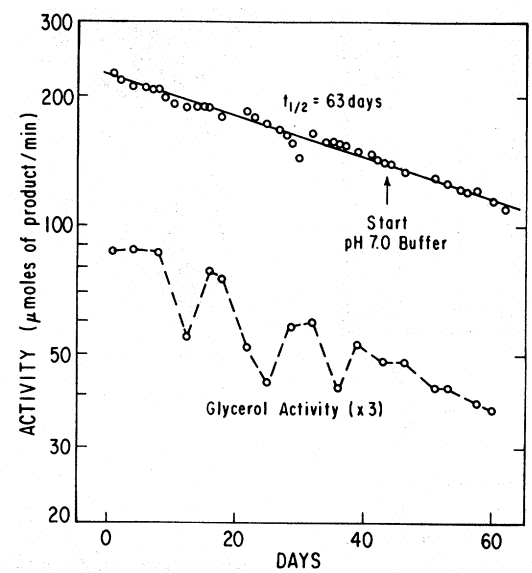

Figure 4. Activity and glycerol activity ($\times 3$) of lipase membrane reactor with sodium acetate buffer followed by sodium phosphate buffer (experiment II, Table I). Flowrates: 0.128 (s = 0.011) mL/min buffer (20mM NaAc pH 5.5 for first 43 days, then switched to 40mM Na phosphate pH 7.0), 0.179 (s = 0.009) g/min tallow, 50°C. Aqueous product pH 5.48 for first 43 days, then 6.51.

Table I. Summary of immobilized lipase reactor data.

		Enzyme used			Recovered filtrate		Operating conditions			Initial activity		Half-life
Experiment	Capsule	Volume (mL)	Activity (IU × 10^{-3})	Protein (mg)	Activity (%)	Protein (%)	Method[a]	Aqueous feed[b]	Time (days)	μmol/min	Yield (%)	(days)
1[c]	B	150	12	630	33	91	I	I	30	42	0.5	5
2[c]	C	250	20	1100	20	68	I	I	23	57	0.4	4[f]
3	A	250	20	1100	37	96	I	I	29	80	0.6	7
4	D	250	20	1100	23	106	I	I	26	90	0.6	6
5	C	250	14	1200	13	88	I	II	127	115	0.9	31
6	B	250	14	1200	16	81	I	II	110	93	0.8	47
7	A	250	14	1200	19	77	I	III	93	82	0.7	24,46[g]
8	D	600	29	2700	6	92	I	II	117	162	0.6	38,108[d]
9	B	1200	21	4200	27	94	I[d]	II	120[e]	85	0.6	55[h]
10	C	1130	21	3800	24	85	II[d]	II	100[e]	150	0.9	31,25[i]
11	D	2000	64	6000	5	105	II[d]	IV, V	62[e]	225	0.4	63[j]

[a] See Figure 2; no recycle unless otherwise indicated.
[b] I, 5m*M* calcium chloride; II, 20m*M* calcium acetate, pH 5.5, 0.02% sodium azide; III, 20m*M* sodium acetate, pH 5.5, 0.02% sodium azide; IV, 40m*M* sodium acetate, pH 5.5, 0.02% sodium azide; V, 40m*M* sodium phosphate, pH 7.0, 0.02% sodium azide.
[c] Capsule new, not washed before use.
[d] With 3 mL/min buffer recycle.
[e] Still operating at time of writing.
[f] See Figure 3.
[g] 16% Hydrolyzed tallow feed.
[h] 18% Hydrolyzed tallow feed.
[i] 7% Hydrolyzed tallow feed.
[j] See Figure 4.

the reactor. The method could have detected as little as a few international units.

The initial activity of the immobilized lipase reactor (Table I) was generally higher when more enzyme was used. The percent activity yield was calculated as follows:

$$\text{Percent yield} = 100 \times \frac{\text{initial immobilized activity}}{(\text{activity used})\left(\dfrac{\%\ \text{activity recovered}}{100}\right)}$$

There was some indication of a lower percent activity yield when more enzyme was used (compare experiments 5 and 6 with experiment 8), which would be expected for a diffusion-limited reactor. In general, however, there were too many other variables (operating method and buffer) to draw any conclusions from the yield data except that it was consistently low, in the range 0.4–0.9%.

Besides showing the reproducibility of the method of immobilization, the main conclusion that can be drawn from Table I is the relationship between the presence or absence of buffer and the half-life. The first four experiments used Aqueous Feed I (5m*M* $CaCl_2$), which is not a buffer, and had half-lives in the range 4–7 days. Figure 3, which is typical of these four experiments, shows that the decreasing half-life during the first 10 days correlated well with the decreasing pH, the final half-life of 4.2 days corresponding to a pH of about 3.8 . Since this is approximately the pH of a mixture of fatty acid and water, it was assumed that fatty acid produced by hydrolysis of tallow and partially neutralized during the first 10 days by buffer present in the crude enzyme was responsible for the decreasing pH. In all subsequent experiments buffer was used to keep the aqueous product pH above 5. Half-lives of the buffered reactors ranged from 24 to 108 days.

Calcium was provided because it was reported to increase the half-life of lipase in a similar reactor.[18] The buffers containing calcium, however, caused the formation of insoluble calcium soaps inside the reactors. Half-lives in the presence of calcium soaps were not reproducible. Therefore, whether different types of buffer, methods of operation, or conversions of tallow feed affected the half-life could not be determined from these data. In experiment 8 there was no change in the activity of the reactor when the recycle of buffer was started. As shown in Figure 4, the glycerol activity generally followed the fatty acid activity, but with a somewhat larger experimental error. Glycerol errors were worse without buffer recycle and were therefore assumed to be caused by uneven flow of glycerol from the reactor. Even with buffer recycle, there was very little turbulence in the reactors, and the glycerol probably tended to accumulate in the bottom of the reactors

because of its higher density. Glycerol activity (×3) was less than half of fatty acid activity, indicating that at low conversion (up to 35% hydrolysis) the major products other than fatty acids were mono- and diacylglycerols rather than glycerol. When the aqueous feed was changed from pH 5.5 to pH 7.0 (Fig. 4), the aqueous product changed from pH 5.48 to pH 6.51, but there was no change in the activity of the reactor.

DISCUSSION

This is the first report of long-term stability of immobilized lipase for continuous hydrolysis of liquid tallow. The procedure achieved long half-lives, and although the best results reported here expressed as activity yield (less than 1%) or as activity per reactor volume (less than one-half unit per cm^3) or per membrane area (0.15 unit/cm^2) are low compared to other immobilized enzymes, they are not unusual among immobilized lipases. There is nothing in these results to suggest that the activity cannot be increased by loading more enzyme and/or by increasing the ratio of membrane area to reactor volume. To increase the activity yield, on the other hand, more must be known about the location of the enzyme in the membrane and the mechanism by which it is retained. If the reaction is severely diffusion limited, which is one possible cause for the low yield, then the yield might be increased by using a much thinner, single-layered membrane or by increasing the flowrate of tallow. The fact that the activity was unchanged when the pH of the aqueous product increased from 5.5 to 6.5 suggests that the active enzyme is not in direct contact with the bulk aqueous phase, as the activity of the soluble enzyme in emulsion systems is known to be pH dependent in this range.[25] On the other hand, the fact that the activity did not increase when a buffer recycle pump was employed suggests that film diffusion on the aqueous side of the membrane is not rate limiting.

CONCLUSIONS

Continuous hydrolysis of tallow at 50°C in an immobilized lipase membrane reactor has been demonstrated. Half-lives of at least 20 days and sometimes more than 2 months were achieved provided that buffer was used to keep the aqueous product pH above 5.0. For continuous hydrolysis of tallow, the fact that no emulsion is required is a major advantage of a membrane reactor for immobilized lipase. The half-lives obtained suggest that further improvements may lead to a reactor suitable for enzymatic fat splitting.

References

1. M. W. Formo, in *Bailey's Industrial Oil and Fat Products,* 4th ed., Vol. 2, D. Swern, Ed. (J Wiley, New York 1982), p. 379.
2. B. W. Werdelmann and R. D. Schmid, *Fette-Seifen-Anstrichmittel,* **84,** 436 (1982).
3. H. L. Brockman, J. Law, and F. J. Kézdy, *J. Biol. Chem.,* **248,** 4965 (1963).
4. J. Lavayre and J. Baratti, *Biotechnol. Bioeng.,* **24,** 1007 (1982).
5. G. Bell and J. R. Todd, *Biotechnol. Bioeng.,* **23,** 1703 (1981).
6. A. R. MacRae, *J. Am. Oil Chem. Soc.,* **60,** 291 (1983).
7. B. Cambou and A. M. Klibanov, *J. Am Chem. Soc.,* **106,** 2687 (1984).
8. Y. Kimura, A. Tanaka, K. Sonomoto, T. Nihira, and S. Fukui, *Eur. J. Appl. Microbiol. Biotech.,* **17,** 107 (1983).
9. T. Kobayashi, I. Kato, K. Ohmiya, and S. Shimizu, *Agric. Biol. Chem.* **44,** 413 (1980).
10. Y. Horiuchi and S. Imamura, *J. Biochem.,* **83,** 1381 (1978).
11. K. Kawashima and K. Umeda, *Agric. Biol. Chem.,* **40,** 1143 (1976).
12. M. M. Rakhimov, N. R. Zemlyanskaya, R. A. Avlyanova, and I. S. Tillyabaeva, *Biokhimiya,* **44,** 1057 (1979).
13. I. Karube, Y. Yugeta, and S. Suzuki, *Biotechnol. Bioeng.,* **19,** 1493 (1977).
14. A. Kilara, *Proc. Biochem.,* **16,** 25, (1981).
15. Y. Kosugi and H. Suzuki, *J. Ferm. Tech.,* **51,** 895 (1973).
16. T. Yamane, T. Funada, and S. Ishida, *J. Ferm. Tech.,* **60,** 517 (1982).
17. R. B. Lieberman and D. F. Ollis, *Biotechnol. Bioeng.,* **17,** 1401 (1975).
18. M. M. Hoq, T. Yamane, S. Shimizu, T. Funada, and S. Ishida, *J. Am. Oil Chem. Soc.,* **61,** 776 (1984).
19. M. M. Hoq, H. Tagami, T. Yamane, and S. Shimizu, *Agric. Biol. Chem.,* **49,** 335 (1985).
20. M. M. Hoq, T. Yamane, S. Shimizu, T. Funada, and S. Ishida, *J. Am. Oil Chem. Soc.,* **62,** 1016 (1985).
21. F. Taylor, *Anal. Biochem.,* **148,** 149 (1985).
22. E. Layne, in *Methods in Enzymology,* Vol. 3, S. P. Colowick and N. O. Kaplan, Eds. (Academic, New York, 1957), p. 447.
23. K. Arima, W. H. Liu, and T. Beppu, *Agr. Biol. Chem.,* **36,** 1913 (1972).
24. K. Arima, W. H. Liu, and T. Beppu, *Agr. Biol. Chem.,* **36,** 893 (1972).
25. W. H. Liu, T. Beppu, and K. Arima, *Agr. Biol. Chem.,* **36,** 1919 (1972).
26. W. H. Liu, T. Beppu, and K. Arima, *Agr. Biol. Chem.,* **37,** 157 (1973).
27. W. H. Liu, T. Beppu, and K. Arima, *Agr. Biol. Chem.,* **37,** 1349 (1973).
28. W. H. Liu, T. Beppu, and K. Arima, *Agr. Biol. Chem.,* **37,** 2487 (1973).
29. W. H. Liu, T. Beppu, and K. Arima, *Agr. Biol. Chem.,* **37,** 2493 (1973).
30. W. H. Liu, T. Beppu, and K. Arima, *Agr. Biol. Chem.,* **41,** 131 (1977).