5665

Rapid electrodialytic clean-up of biological samples for high-performance liquid chromatography

Jeffrey D. Brewster and Edwin G. Piotrowski

US Department of Agriculture, ARS, Eastern Regional Research Center, 600 East Mermaid Lane, Philadelphia, PA 19118 (USA)

ABSTRACT

A sample clean-up system employing electrodialysis with size-selective and charge-selective membranes is described. When applied to the treatment of 0.5-ml milk samples containing sulfamethazine, the system produced an undiluted, clear solution in 3 min and eliminated the components in untreated milk that caused column fouling and double peaks. In contrast to conventional liquid- and solid-phase extraction procedures, electrodialytic clean-up is readily automated and uses no organic solvents.

INTRODUCTION

The preparation of biological samples for chromatographic analysis is frequently the slowest and most labor-intensive step in the analytical process. Typical extraction procedures are complex, difficult to automate and entail the expense of handling and disposing of large volumes of organic solvents. Significant improvements in the efficiency and cost of such analyses could be realized by the development of rapid, readily automated sample clean-up procedures. Procedures which also avoid use of organic solvents and provide sufficient sample capacity to allow off-line or on-line concentration would be most effective.

Kok *et al.* [1,2] recently introduced zone electrophoretic sample treatment (ZEST), an on-line electrophoretic technique for the isolation of low-molecular-weight ionic species from complex matrices. While effective in the rapid isolation of analytes from biological matrices, ZEST lacks sufficient sample capacity for trace analysis. In ZEST, a long, narrow sample volume is used in order to maximize sample capacity while suppressing convective mixing and providing efficient removal of Joule heat [1]. Migration occurs parallel to the long axis of the sample volume, so that the analyte must migrate the full length of the sample plug in order to separate from the matrix. Placing a semi-permeable membrane perpendicular to the field permits the use of a different geometry in which migration takes place across the narrow dimension of the sample volume, through the membrane and into a receiving solution. The analyte need only migrate a short distance to achieve complete separation from the matrix, and the increased separation speed permits continuous sample introduction, resulting in much higher throughput. Using appropriate membrane types and configurations, it is possible to remove ions from a feed stream, to concentate an ionic solute or to separate macromolecules and neutral species from small ions. Such electrodialytic systems have long been used on an industrial scale for applications such as desalination of water and concentration of whey [3].

Analytical applications of electrodialysis for the extraction of a number of pharmaceutical compounds [4–6] and metal ions [7] have been described. Although indicating the potential utility of electrophoretic sample treatment, these studies did not demonstrate the capability to isolate rapidly trace levels of analyte from biological samples in volumes compatible with moden chromatographic techniques. The apparatus described here employs

continuous sample introduction and microliter volumes for the isolation of a charged drug (sulfamethazine) from a complex matrix (skim milk) in less than 5 min. Although the clean-up step was conducted off-line in this work, on-line connection to a high-performance liquid chromatographic (HPLC) system is readily implemented. After completion of this work, a study of electrodialytic sample treatment for amphetamine in serum was published [8].

EXPERIMENTAL

Reagents and solutions

Sulfamethazine (Sigma), Alizarin Red S (National Aniline Division, New York, NY, USA), Procion Blue (Pharmacia), bovine serum albumin (Sigma), tris(hydroxymethyl)aminomethane (Tris), hydrochloric acid, potassium dihydrogenphosphate (Mallinckrodt), non-fat milk (Harbison's Dairies, Bristol, PA, USA), dialysis tubing (Dialya-Por; Thomas Scientific, Philadelphia, PA, USA) and fabric-reinforced cation-exchange membrane type 103QZL386 (Ionics, Watertown, MA, USA) were used as received. Spiked milk was prepared by addition of aqueous stock sulfamethazine to give a concentration of 4 μg/ml and stored at 4°C. Prior to treatment and/or analysis, an aliquot was diluted 1:20 with 0.01 *M* Tris buffer (pH 8.5).

Apparatus

Electrodialysis was conducted in a locally constructed cell shown in Fig. 1. The cell consisted of a stack or "sandwich" of membrane support plates (b,i), membranes (d,f,h) and 0.35-mm fluoropolymer gaskets (e,g), which form the feed and receiving compartments. These stack components were pressed between two 50 × 75 × 9 mm poly(methyl methacrylate) (PMA) blocks (b,j) containing cylindrical holes which formed the anode and cathode compartments. PMA cover plates (a,k) fit over the blocks to seal the electrode compartments. Bolts (omitted for clarity) passed through holes (not shown) around the periphery of the PMA blocks and stack components to compress and seal the stack. Feed and receiving buffers were introduced through 0.5 mm I.D. fluoropolymer tubes which were joined with threaded fittings (m) to one of the PMA blocks. Small holes in each of the stack components allowed fluid to flow from these fittings in-

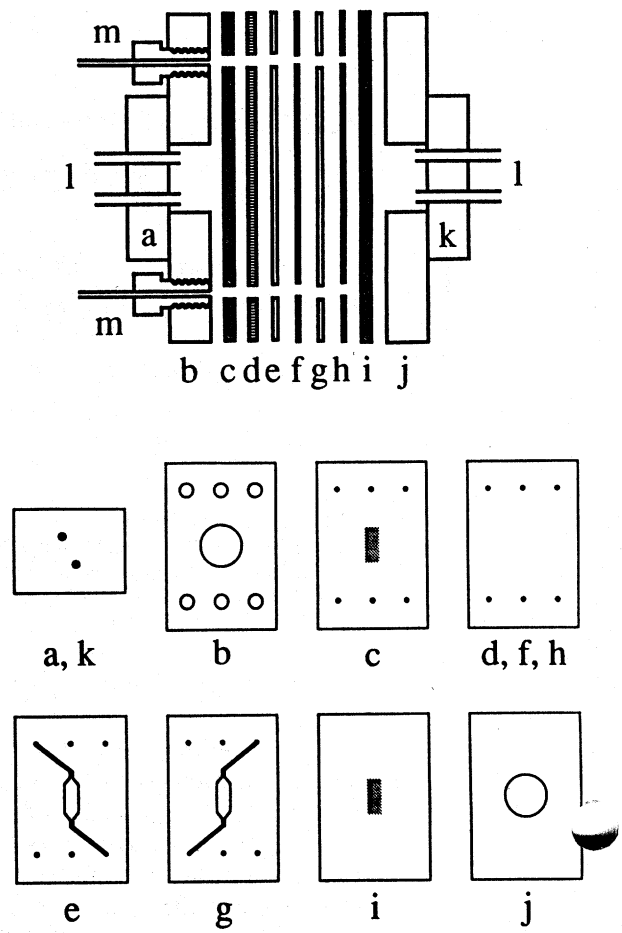

Fig. 1. Electrodialysis cell. a = Anode compartment cover-plate; b = PMA block; c = membrane support plate; d = cation-exchange membrane; e = gasket with receiving compartment; f = dialysis membrane; g = gasket with feed compartment; h = dialysis membrane; i = membrane support plate; j = PMA block; k = cathode compartment cover-plate; l = 3 mm O. D tubular stainless-steel electrodes; m = threaded fittings for feed and receiving buffer inlet/outlet.

to the feed and receiving compartments. The tota volume of each fluid path was *ca.* 100 μl, and th active membrane area was *ca.* 1 cm^2. Electrolyt was pumped through flexible plastic tubing con nected to 3 mm O.D. stainless-steel tubes (1 pressed into the electrode compartment cover plates. These stainless-steel tubes also served a electrodes. The membrane support plates were 1.5 mm rigid plastic sheets perforated with a rectan gular array of small holes.

The sample treatment system is shown schematically in Fig. 2. Each of the four fluid streams was fed with a peristaltic pump channel [Manostat (New York, USA) cassette pump]. Sample was introduced into the sample stream by a low-pressure loop injection valve (Rheodyne) with a 0.5-ml injection volume. Treated sample was collected in small test-tubes at the outlet of the cell. A power supply capable of delivering up to 400 V at 100 mA (Heathkit Model IP-32) was used.

The locally assembled HPLC system consisted of an LC-500 syringe pump (Isco), a Model 7125 injector (Rheodyne) with a 100-μl loop, a 250 × 4.6 mm I.D. columns with 5-μm LC18 packing (Supelco) and a Model 115 variable-wavelength UV detector (Gilson) operated at 265 nm. The mobile phase was 0.05 *M* phosphate buffer (pH 6.0)–methanol (70:30) at a flow-rate of 1.5 ml/min [9].

Procedure

Feed, receiving and electrolyte solutions were pumped through the cell and the desired voltage applied. Solutions to be treated were loaded into the loop of the injector and fed into the cell by switching the valve. Recovery (ratio of total analyte in receiving stream to analyte injected) was determined by off-line spectrophotometry of the collected feed and receiving streams following injection of 0.5 ml of sample. The following conditions were used for milk sample treatment: feed flow-rate, 0.29 ml/min; feed buffer, 0.01 *M* Tris (pH 7.4); receiving flow-rate, 0.12 ml/min; receiving buffer, 0.1 *M* Tris (pH 8.5); electrolyte flow-rate, 4.5 ml/min; electrolyte, 0.1 *M* Tris–1 *M* KCl (pH 8.5); applied voltage, 16 V; applied current, 72 mA. The fraction emerging from the receiving side between 2 and 3 min after injection was collected and a 50-μl aliquot was analyzed off-line by HPLC by partially filling the injection loop. Untreated milk was filtered through a 0.2-μm syringe filter prior to HPLC analysis.

RESULTS AND DISCUSSION

The analysis of milk for sulfa drugs is representative of the problems encountered with the HPLC of biological samples. Although there are no chroma-

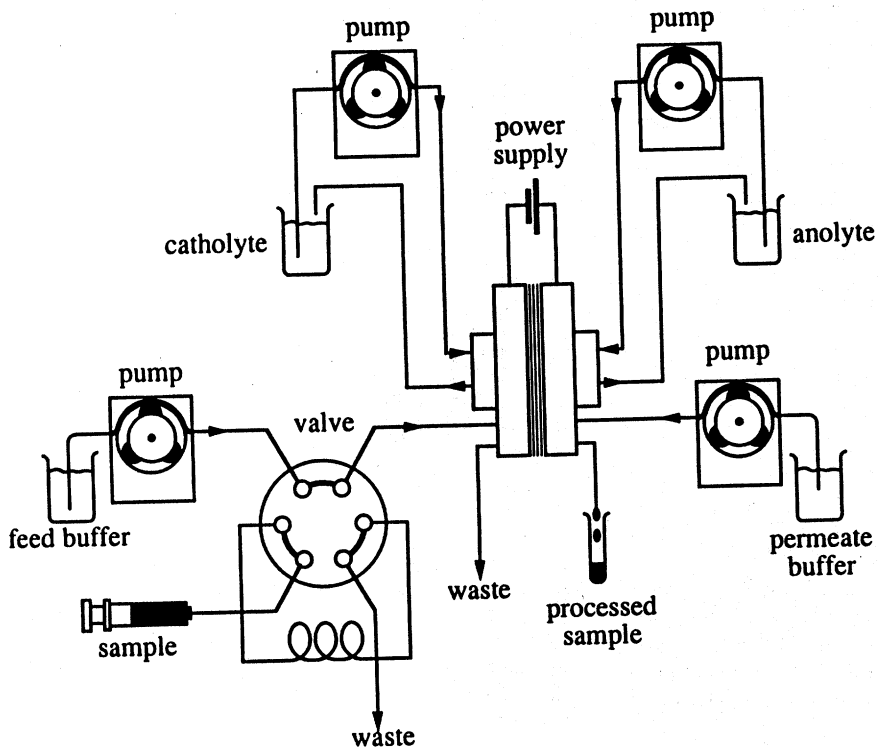

Fig. 2. Electrodialytic sample clean-up system.

tographic interferences from skim milk under the conditions used for this analysis, injection of untreated milk results in rapid degradation of the separation and eventual desctruction of the column, as evidenced by peak broadening, peak splitting and increasing back-pressure. Sample clean-up using solvent extraction [9], solid-phase extraction [10] or dialysis/trace enrichment [11] is typically required in order to remove the sample components which cause these difficulties.

The stack-type electrodialysis cell provides considerable flexibility in membrane configuration and other operating parameters. The physical dimensions of the cell represent a compromise between maximizing the recovery of analyte (large membrane area, short residence times) and minimizing the non-selective transport of matrix constituents (small membrane area, short residence times). Initial studies were conducted with the anionic dye Alizarin Red S (ARS) as a model analyte, and bovine serum albumin covalently labelled with Procion Blue (BSA/PB) as a model matrix. The effects of flow compartment geometry, sample conductivity, applied potential and flow-rate were evaluated. Recovery was measured using 1 mg/ml ARS, and selectivity (ratio of ARS to BSA/PB recoveries) was measured with ARS–BSA/PB mixtures. Selectivity was typically >95:1. Rectangular flow channels gave higher recoveries than circular and serpentine channels, and were more readily cleared of bubbles. In general, recovery was directly proportional to residence time and applied voltage and inversely proportional to sample conductivity and flow-rate. At high applied potential (> 18 V) and/or very low flow-rates (< 0.1 ml/min), pH shifts occurred in the cell which reduced the recovery and sometimes resulted in precipitation of solutes. These effects could be minimized, although not eliminated, by main-

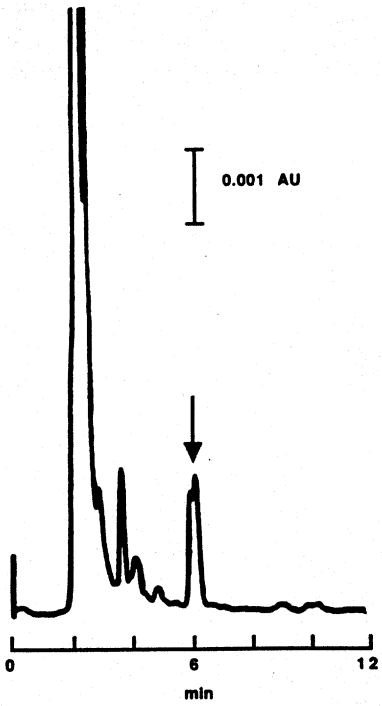

Fig. 3. Chromatogram of untreated, spiked milk (4 μg/ml sulfamethazine, diluted 1:20 with buffer prior to injection). The arrow indicates the sulfamethazine peak. Column, LC18, 250 mm × 4.6 mm I.D. detection, UV absorbance at 265 nm; mobile phase, 0.05 *M* phosphate (pH 6)–methanol (70:30); flow-rate, 1.5 ml/min.

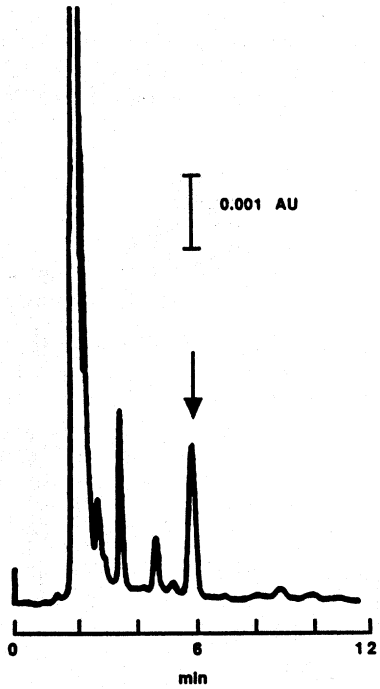

Fig. 4. Chromatogram of electrodialytically treated, spiked milk (4 μg/ml sulfamethazine, diluted 1:20 with buffer prior to treatment). The arrow indicates the sulfamethazine peak. Column, LC18, 250 mm × 4.6 mm I.D.; detection, UV absorbance at 265 nm; mobile phase, 0.05 *M* phosphate (pH 6)–methanol (70:30); flow-rate, 1.5 ml/min. See text for electrodialytic treatment conditions.

taining the flow-rate and buffer strength of the anolyte and catholyte at a high level. The receiving solution could be enriched in analyte by reducing the receiving flow-rate relative to the feed flow-rate, but this concentrating effect was limited to a factor of *ca.* 3 by the need to keep the feed flow at < 0.3 ml/min in order to obtain good recovery and the receiving flow-rate at >0.1 ml/min in order to avoid large pH shifts. Under the conditions used for the treatment of milk samples, enrichment of sulfamethazine in the receiving solution did occur. However, dilution of the sulfamethazine-enriched material as it was pumped out of the cell and into the collection vessel largely negated the enrichment effect, as indicated by the similar peak heights for the treated and untreated samples.

Fig. 3 shows a chromatogram of a sample of filtered, diluted, spiked milk. Injection of this cloudy liquid resulted in reproducible broadening and splitting of the sulfamethazine peak, which was not observed with sulfamethazine standards. Several consecutive injections of untreated sample resulted in a column pressure rise and peak splitting which persisted in subsequent standard injections. Treated milk was a clear liquid which gave a chromatogram (Fig. 4) with sharp peaks and no degradation of column performance on repeated injection.

Electrodialytic sample treatment provided a rapid, solvent-free, readily automated technique for preparing milk samples for HPLC analysis. Extension of the technique to other analytes and biological fluids appears promising and is currently under study.

REFERENCES

1 W. Th. Kok, *Chromatographia*, 24 (1987) 442.
2 W. Th. Kok, K.-P. Hupe and R. W. Frei, *J. Chromatogr.*, 436 (1988) 421.
3 W. A. McRae, in M. Grayson and D. Eckrodt (Editors), *Kirk-Othmer Encyclopedia of Chemical Technology*, Vol. 8, Wiley, New York, 3rd ed., 1979 p. 726.
4 N. Tsunakawa, *Chem. Pharm. Bull.*, 19 (1971) 1164.
5 N. Tsunakawa, *Chem. Pharm. Bull.*, 19 (1971) 2579.
6 N. Tsunakawa, *Chem. Pharm. Bull.*, 19 (1971) 2585.
7 J. A. Cox and R. Carlson, *Anal. Chim. Acta*, 130 (1981) 313.
8 A. J. J. Debets, W. Th. Kok, K.-P- Hupe and U. A. Th. Brinkman, *Chromatographia*, 30 (1990) 361.
9 J. D. Weber and M. D. Smedley, *J. Assoc. Off. Anal. Chem.*, 72 (1989) 445.
10 N. Haagsma and C. van de Water, *J. Chromatogr.*, 333 (1985) 256.
11 M. M. L. Aerts, W. M. J. Beek and U. A. Th. Brinkman, *J. Chromatogr.*, 435 (1988) 97.