COMPRESSED CONDENSATION OF WATER VAPOR ON CHILLED BRINE

L. C. DICKEY† and E. R. RADEWONUK
U.S. Department of Agriculture, Agricultural Research Service, Eastern Regional Research Center, Philadelphia, PA 19118, U.S.A.

Abstract—Inexpensive removal of low-pressure water vapor is an essential requirement for economically attractive direct freeze concentration. The currently used method is condensation on a chilled metal surface rinsed by a recirculating saline solution. Although simple condensation is inexpensive on a large scale, the requirement of a large condensing surface and low capital cost lead to poor heat transfer, especially for facilities less than about 20 kg/h. An alternative approach is to combine condensation with mechanical compression, but little information is publicly available that can be used to determine the feasibility of this approach. Our measurements of condensation rate in a chilled liquid ring (LR) vacuum pump show that correlations for smooth films do not describe condensation in these pumps. The measured condensation rates indicate that LR pump compression does not substantially increase condensation.

Key Words: condensation, low pressure, compression, vacuum pump, liquid ring

1. INTRODUCTION

Direct freeze concentration of aqueous solutions requires maintenance of pressures at the concentrated solution triple point, typically around 0.4 N/m^2. This can be achieved by saline rinsed condensation with concurrent removal of noncondensible gases by mechanical pumping (Shiloh & Sideman 1967; Fleming 1983). Removal of the noncondensible gases with oil-lubricated mechanical pumps is effective but inconvenient because of the need to remove water vapor from the pumped stream. Liquid ring (LR) pumps are customarily used for vacuum service above 3 N/m^2, and can be adapted to lower pressure, triple point service by adding a preceding blower and by cooling the sealing (ring) liquid to reduce its vapor pressure.

A chilled liquid ring pump/blower (LR/B), with low sealing liquid vapor pressure can, in principle, condense vapor faster than it can pump noncondensing vapor or gas. Although there are several descriptions of the type of apparatus used in this study (Eichholz 1988; Grigorov *et al.* 1986), no published work on low-pressure condensation was found that can be used to make reasonable estimates of the condensing rate of low-pressure air–water vapor mixtures on the free surface of a swirling brine annulus.

Attached to an agitated freezer, as shown in figure 1, an LR/B will have an essentially inexhaustible supply of low-pressure water vapor. In the direct freeze concentration process feed liquid is concentrated as a batch, with ice being filtered from the slurry produced in the freezer and the concentrated liquid returning to the feed tank. The low pressure in the freezer is sealed by the progressing cavity pumps which circulate the slurry and feed liquid. A saline liquid (absorbent) is recirculated through the upper section, to which it is fed via a spray nozzle at the top. The absorbent is cooled by contact with the chilled metal tubing walls in the vessel and externally, during passage through a shell and tube heat exchanger. The volume of absorbent is held constant; excess liquid resulting from vapor condensation is dumped through a float controlled valve.

†To whom correspondence should be addressed.
Mention of brand or firm does not constitute an endorsement by the U.S. Department of Agriculture over others of a similar nature not mentioned.

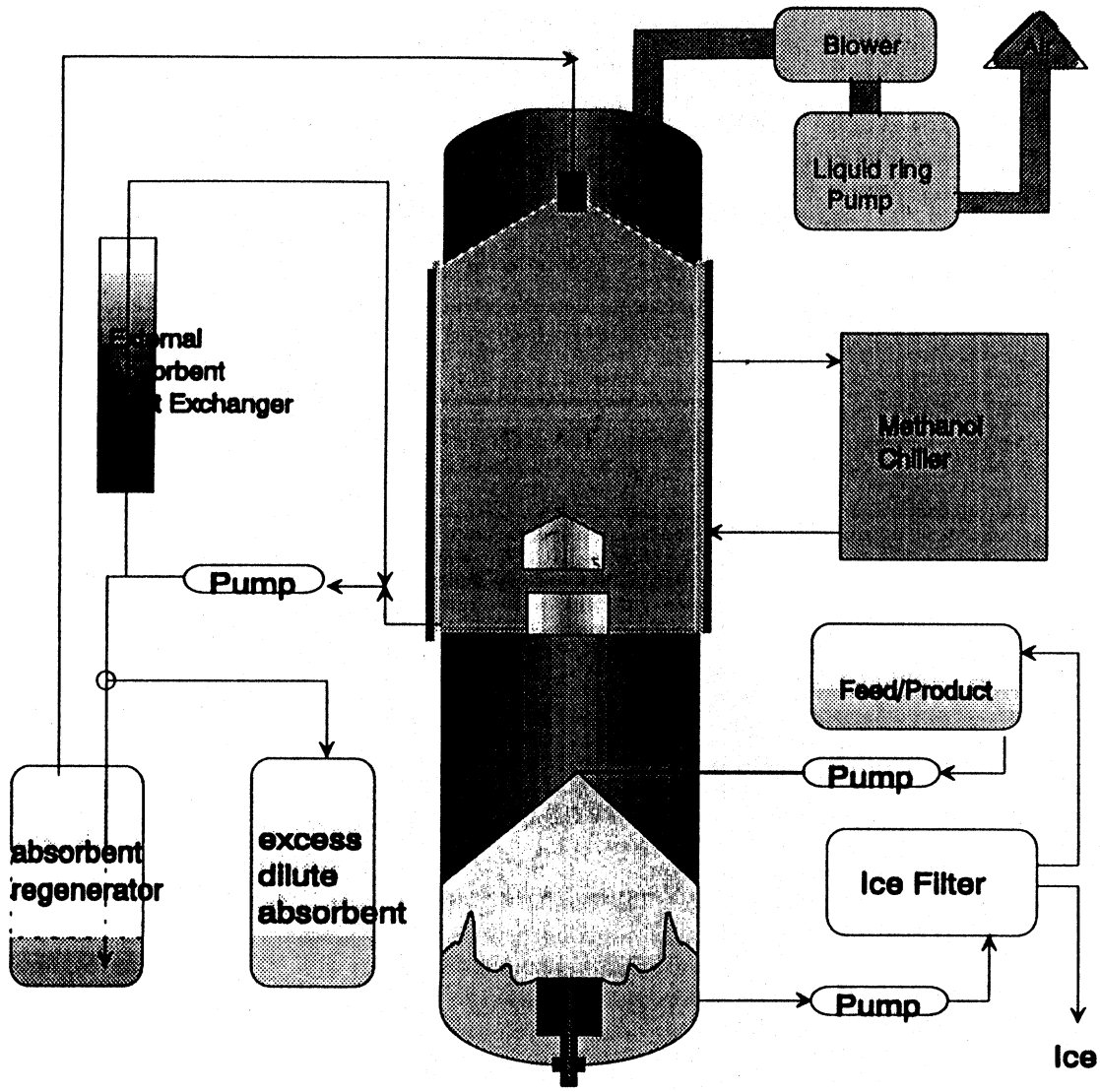

Figure 1. Direct freeze concentration process diagram.

Estimates of the maximum evaporation rate from the freezing slurry can be based on the pressures over the slurry and at the inlet to the blower, using a recently published approximate solution of the conservation equations using Maxwell–Boltzmann (MB) distributions of vapor molecules (Barrett & Clement 1992). For the system shown in figure 1 with a saturated pressure at the evaporating surface of 0.545, and an inlet pressure of 0.532 N/m^2, the maximum rate, for an evaporating surface of 0.3 m^2, calculated using the MB estimate is $6 \cdot 10^{-3}$ kg/s. Measured evaporation rates with the system shown in figure 1 were in the range $2\text{–}4 \cdot 10^{-3}$ kg/s.

The evaporation rate can be determined from measurements of change in the evaporating liquid mass, or from the inlet and outlet concentrations as determined by temperature or any other correlated property and flow rate through the freezer. The measured evaporation rate was considered equal to the condensation rate in the LR pump when no coolant was pumped through the section above the agitated slurry and absorbent was not recirculated. The condensation rate so determined correlated well with the temperature increase in the LR sealing liquid.

2. EXPERIMENT

The LR pump used consists of a shrouded rotor which rotates within an eccentric cylindrical casing, with no metal-to-metal contact between the rotor and casing. Sealing liquid enters through the end plane, below the vapor inlet, and is thrown against the casing by the rotation, forming a sealing ring. A fixed port concentric with the rotor directs the vapor phase into the suction ports. Gas and vapor is trapped between the blades by the liquid receding during rotation away from the inlet port. From the point of maximum eccentricity onward the gas and vapor are compressed by the LR as it is forced radially inward toward the central outlet port. After each revolution the compressed gas and vapor and accompanying liquid are discharged. An end view of the pump is shown in figure 2. The pump was combined with a Roots type blower, model A100T (Fluid-Vac; Atlantic Fluidics Inc., Stamford, CT 06902, U.S.A.), driven by a common 5 hp motor.

A sealing solution of 21 wt% NaCl was recirculated through the LR pump during operation. The internal pump surface wetted by sealing liquid is a 13.3 cm dia cylinder, 4.75 cm wide, with a liquid condensing surface of about 117 cm^2. At the directly coupled motor speed of 3500 rpm liquid flow rates in the pump are around 24 m/s. Approximately 3.5 kW of LR pump sealing solution chilling was needed to maintain steady temperatures at absorption pressures of 0.545 N/m^2. The water-cooled blower produced a compression ratio of about 2, the LR pump one of 70. A diagram of the connections between the LR pump, blower and sealing liquid cooling equipment is shown in figure 3.

Temperatures were measured with thermocouples installed at the LR pump liquid inlet, the (vapor) connection between the blower and the LR pump and the gas/vapor/liquid outlet. The pressure of the blower output was measured with a Barocel capacitance manometer. Continuous measurements were recorded at 20-s intervals.

The agitated freezer/absorber contained in a single vacuum shell, consists of two sections: the upper, the water condensing section, is 91 cm high; the lower, the freezer is 66 cm high. The cylindrical sections are 61 cm dia with hemispherical ends.

Flow rates into and out of the freezer were measured with paddlewheel and magnetic flowmeters. When the evaporation rate is high enough to keep the liquid in the freezer at its freezing point the rate can be calculated from measured influent and effluent temperatures. Feed to the freezer was from an agitated, chilled tank held within a degree or two of freezing. Published correlations of temperature with the activity of freezing solutions (Chen 1988) and density (Chen *et al.* 1980) provide the information necessary to calculate the NaCl solution enthalpy.

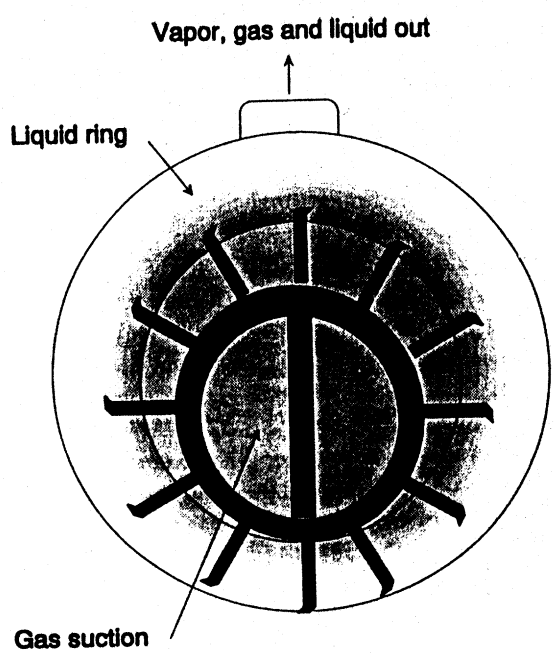

Figure 2. LR pump, end view.

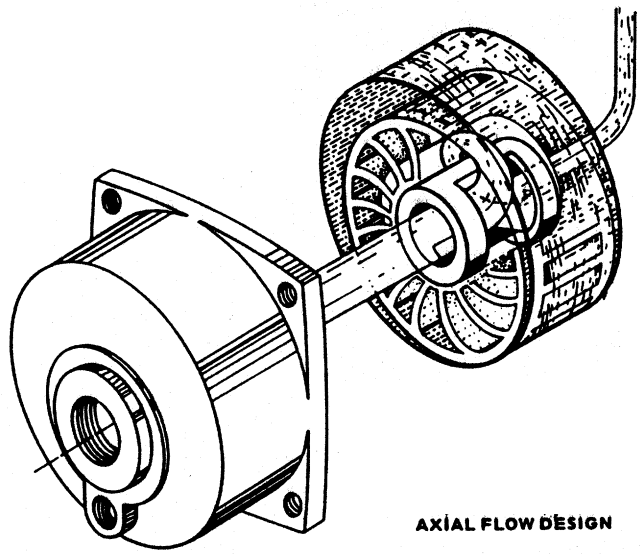

Figure 3. LR pump, blower and sealing liquid circuit.

3. RESULTS

The LR/B air pumping rate was measured by adjusting flow to the freezer through a valve to the ambient air, while pumping, to produce freezer pressures in the range of the triple point of a dilute aqueous solution. A measured inlet air flow of $3 \cdot 10^{-3}$ (standard) m^3/min produced a 0.4 N/m^2 pressure in the freezer while being compressed to 5 N/m^2 by the blower. The air flow rate at the triple point pressure, 0.4 N/m^2, is equivalent to $4 \cdot 10^{-5}$ kg/s of uncondensed water vapor compressed through the LR/B. This is about 0.2 times the rate of water vapor transfer through the LR/B, around $2.4 \cdot 10^{-2}$ kg/s, and thus the fraction of vapor pumped, of the total transferred, was less than 0.2. Increasing the blower cooling rate by a factor of 3 reduced the LR vapor inlet temperature from 36 to 30°C, increasing the transfer rate from 2.1 to $2.4 \cdot 10^{-4}$ kg/s. The rate was insensitive to changes in the temperature difference between the vapor and liquid inlets, ranging from 25 to 40°C. The relatively high ratio of blower inlet pressure to freezer pressure insures that the vapor flow is not choked by the 5.1 cm i.d. tubing connecting the blower and freezer.

It is generally agreed that condensation rate on moving films depends directly on the transfer of heat from the vapor interface into the liquid by convection within the film. This convection proceeds through large eddies in the film created by shear between the liquid and stationary walls. A detailed model of flow in LR pumps is considerably more complicated than published studies for simpler flow conditions (Grigorov *et al.* 1986; Hughes & Duffey 1991). Not only is the relevant geometry more complicated than one-dimensional falling film and horizontal duct flows but the vapor is compressed during the pumping cycle.

The effect of the vapor/liquid interface motion and the vapor compression on the LR condensation rate can be estimated by comparison with condensation on liquid streams with similar properties, flowing over planar surfaces. An average liquid Reynolds number for the pump can be defined as

$$\mathrm{Re}_L = x_{LR} u / \nu = 2.3 \cdot 10^6,$$

where x_{LR} is the circumferential interface path length (33 cm), u is the liquid velocity (1260 cm/s) and ν is the kinematic viscosity of the liquid (0.018 cm^2/s).

To calculate an average vapor Reynolds number, Re_G, we estimated the appropriate vapor flow velocity to be about one-half that of the liquid. The water vapor kinematic viscosity at 273 K is 20.6 cm^2/s and the average path length is 24.7 cm.

At the LR pump inlet the average vapor velocity is about the same as that of air measured in the air pumping tests (630 cm/s). Condensation will reduce and compression increase, the vapor density, but the velocity parallel to the interface with remain essentially the same. Liquid and vapor

flow rates are equal at the interface, with the (virtual) circumferential vapor velocity near zero at the rotor axis. The LR interface with the vapor is the maximum vapor path length (33 cm). Incoming vapor is drawn into the rotating sectors formed by the impeller blades and the LR during the ported length of the cycle when the sector volume is expanding. The minimum path length is one-half the maximum and three-quarters of the maximum, 24.7 cm was used as a rough estimate of the average (moving) vapor path length. Using this characteristic length we calculate $Re_G = 760$. The average liquid Prandtl number was estimated from $C_p mu/k = 12.5$.

The preceding values can be used to determine a Nusselt number from the Lim *et al.* (1984) correlation for smooth concurrent condensation:

$$\mathrm{Nu} = 0.534\, \mathrm{Re}_G^{0.58} \mathrm{Re}_L^{0.09} \mathrm{Pr}^{0.3}$$

$$= 198.$$

This is certainly a high estimate for the LR pump, since the Lim correlation is for channel flow driven by upstream pressure, whereas in the pump the vapor is carried along by the liquid surface and driven by the rotor blades. The pumped liquid should have less eddying than channel flow with similar Reynolds numbers due to the short path length compared to the thickness of the LR.

The heat transfer coefficient $H = \mathrm{Nu}\, k/x$, taking $x = 24.7$ cm, and k, the liquid thermal conductivity, as 0.548 W/m K is then calculated:

$$H = 0.44\ \mathrm{kW/(m^2\ K)}.$$

The condensation rate, w, for channel flow with LR pump flow rates and estimated Nu can be calculated from a simplified form of [3] in the paper of Lim *et al.* (1984):

$$w = H\gamma/C_p = 1.55\ \mathrm{g/s},$$

where γ, the area of liquid vapor contact, is 117 cm^2 and C_p, for 21% NaCl solution at 269 K is 3.26 J/g K.

Condensation rates of 0.24 and 0.21 s were measured at LR liquid flow rates of 0.11 and 0.19 kg/s, respectively, confirming the low dependence of the condensation rate on Re_L, for the conditions used, but not agreeing with the expected rate themselves. Use of the smooth film correlation of Lim *et al.* (1984) is clearly not adequate to predict the condensation rates which are nearly an order of magnitude lower than the prediction based on uncompressed flow. It has been suggested that noncondensible air mixed with the water vapor is significantly impeding condensation. The air fraction of the vapor/air mixture led to the blower is quite small. The closed upstream equipment gains only about 0.3 N/m^2 due to leaks when held overnight at test conditions. Adding a separate pump to remove air from the LR pump would remove a major motivation for the development of the LR pump to remove water vapor and air (its primary function).

We conclude that LR-type devices are not promising for absorption/condensation at low vacuum. While the low dependence of Nu on the liquid flow rate for smooth films was observed, the measured condensation rates were well below those which would be expected from a channel flow correlation and LR compression does not provide a significant improvement in low-pressure condensation rates.

Acknowledgment—The authors thank Michael F. Dallmer who modified and operated the equipment to produce the data on which this report is based.

REFERENCES

BARRETT, J. & CLEMENT, C. 1992 Kinetic evaporation and condensation rates and their coefficients. *J. Colloid Interface Sci.* **150**, 352–364.

CHEN, C. A., CHEN, J. C. & MILLERO, F. J. 1980 Densities of NaCl, $MgCl_2$, Na_2SO_4 and $MgSO_4$ aqueous solutions at 1 atm from 0 to 50°C and from 0.001 to 1.5 m. *J. Chem. Engng Data* **25**, 310–312.

CHEN, C. S. 1988 Water activity change in aqueous solutions at subfreezing temperatures. *Leben.-Wiss. Technol.* **21**, 256–258.

EICHHOLZ, H. 1988 Condensation process and apparatus for water vapor that is under a vacuum. U.S. Patent 4,733,016.

FLEMING, L. 1983 Final report on the testing of the absorption freezing vapor compression pilot plant at the Wrightsville Beach Test Facility. OSW Report PB84-110741.

GRIGOROV, V. P., SIZOV, L. V. & SOKOLOV, A. E. 1986 Effect of the presence of a liquid in the outlet gas on the performance of a liquid-ring vacuum pump. *Chem. Pet. Engng* **22**, 139–142 (English translation of *Khimicheskoe i Neftyanoe Mashinostroenie*).

HUGHES, E. D. & DUFFEY, R. B. 1991 Direct contact condensation and momentum transfer in turbulent separate flows. *Int. J. Multiphase Flow* **17**, 599–619.

LIM, I. S., TANKIN, R. S. & YUEN, M. C. 1984 Condensation measurement of horizontal concurrent steam/water flow. *J. Heat Transfer* **106**, 425–432.

POWLE, U. S. & SUBIR, K. 1983 Investigations on pumping speed and compression work of liquid ring vacuum pumps. *Vacuum* **33**, 255–263.

SHILOH, K. & SIDEMAN, S. 1967 Direct contact heat transfer with change of phase: evaporation rates in vacuum freezers. *Can. J. Chem. Engng* **43**, 300–305.